Archer | Donahue

Boston, MA

Locus Map

November 2, 2016

DEVELOPER : JDMD Owner, LLC

ARCHITECT : The Architectural Team

14188

tat | the architectural team

Archer | Donahue

Boston, MA

Existing Conditions
Archer Building

November 2, 2016

DEVELOPER : JDMD Owner, LLC

ARCHITECT : The Architectural Team

14188

tat | the architectural team

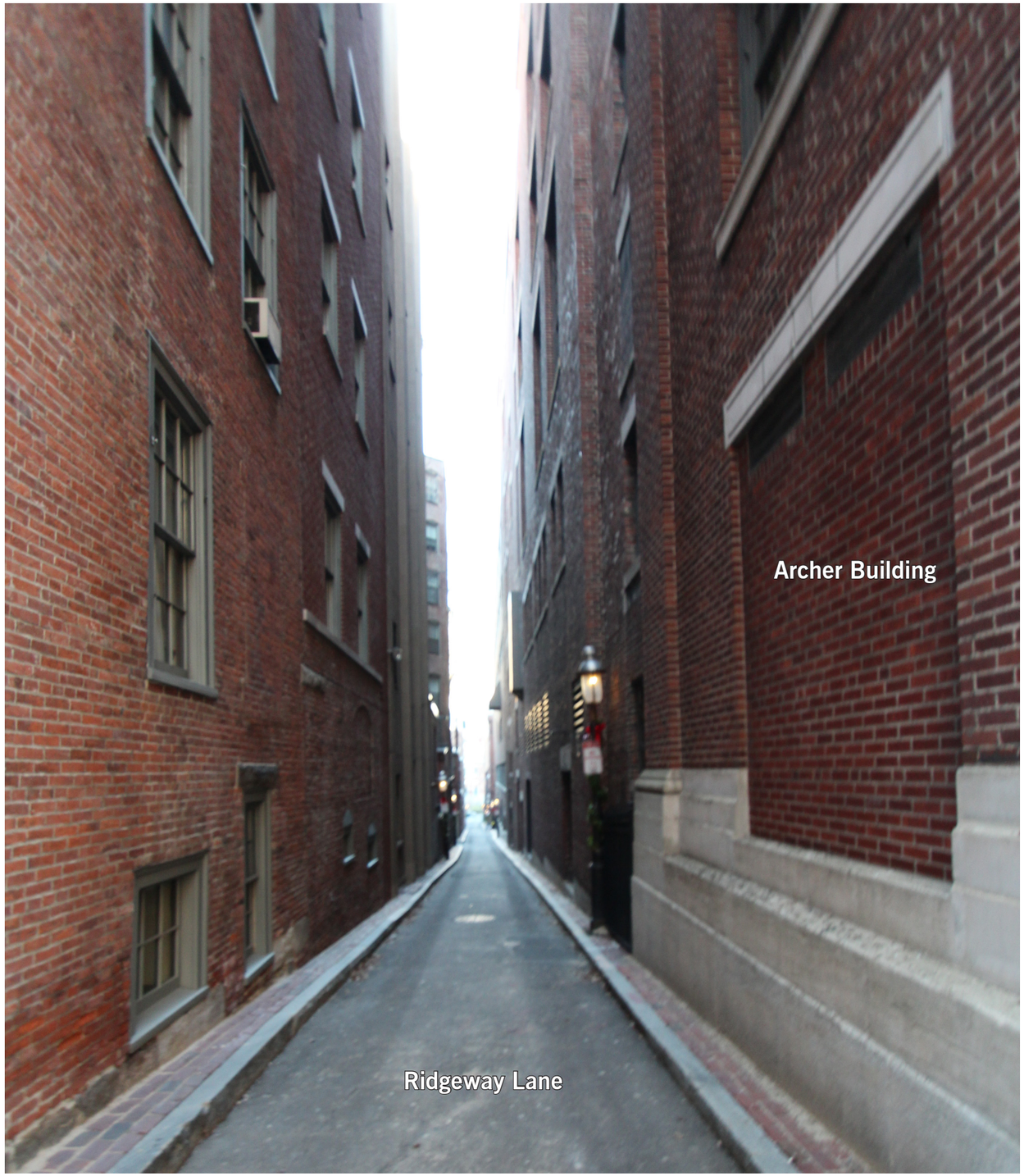

Archer | Donahue

Boston, MA

Existing Conditions
Archer & Donahue Buildings

November 2, 2016

DEVELOPER : JDMD Owner, LLC

ARCHITECT : The Architectural Team

14188

tat | the architectural team

Donahue Building from Temple Street Park

Donahue Building from Temple Street Park

Temple Street Park

Donahue Building & North Alley

Archer | Donahue

Boston, MA

Existing Conditions
Donahue Building &
Temple Street Park

November 2, 2016

DEVELOPER : JDMD Owner, LLC

ARCHITECT : The Architectural Team

14188

tat | the architectural team

Archer | Donahue

Boston, MA

Existing Conditions
Donahue Building

November 2, 2016

DEVELOPER : JDMD Owner, LLC

ARCHITECT : The Architectural Team

14188

tat | the architectural team

Archer | Donahue

Boston, MA

Site Plan

November 2, 2016

DEVELOPER : JDMD Owner, LLC

ARCHITECT : The Architectural Team

14188

tat | the architectural team

Archer | Donahue

Boston, MA

Aerial Perspective
Existing Conditions

November 2, 2016

DEVELOPER : JDMD Owner, LLC

ARCHITECT : The Architectural Team

14188

tat | the architectural team

Archer | Donahue

Boston, MA

Aerial Perspective
Existing Conditions

November 2, 2016

DEVELOPER : JDMD Owner, LLC

ARCHITECT : The Architectural Team

14188

tat | the architectural team

Temple Street Existing Elevation

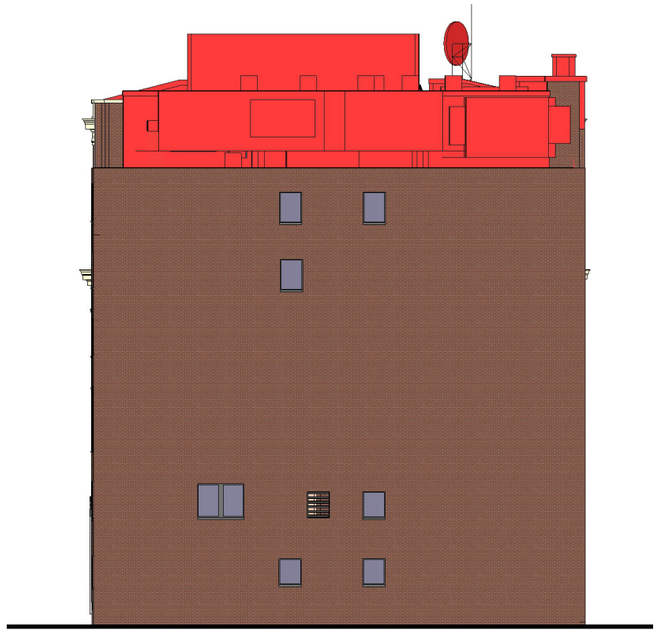

Alley (North) Existing Elevation

Archer | Donahue

Boston, MA

Existing Building Elevations

November 2, 2016

DEVELOPER : JDMD Owner, LLC

ARCHITECT : The Architectural Team

14188

tat | the architectural team

Temple Street Elevation

Alley (North) Elevation

Archer | Donahue

Boston, MA

Building Elevations
October 20, 2016 Design

November 2, 2016

DEVELOPER : JDMD Owner, LLC

ARCHITECT : The Architectural Team

14188

tat | the architectural team

Temple Street Elevation

Alley (North) Elevation

Archer | Donahue

Boston, MA

Proposed Building Elevations

November 2, 2016

DEVELOPER : JDMD Owner, LLC

ARCHITECT : The Architectural Team

14188

tat | the architectural team

Ridgeway Lane Existing Elevation

Derne Street Existing Elevation

Archer | Donahue

Boston, MA

Existing Building Elevations

November 2, 2016

DEVELOPER : JDMD Owner, LLC

ARCHITECT : The Architectural Team

14188

tat | the architectural team

Ridgeway Lane Elevation

Derne Street Elevation

Archer | Donahue
Boston, MA

Building Elevations
October 20, 2016 Design

November 2, 2016

DEVELOPER : JDMD Owner, LLC

ARCHITECT : The Architectural Team

14188

tat | the architectural team

Ridgeway Lane Elevation

Derne Street Elevation

Archer | Donahue

Boston, MA

Proposed Building Elevations

November 2, 2016

DEVELOPER : JDMD Owner, LLC

ARCHITECT : The Architectural Team

14188

tat | the architectural team

Archer | Donahue

Boston, MA

Aerial View
Existing Building

November 2, 2016

DEVELOPER : JDMD Owner, LLC

ARCHITECT : The Architectural Team

14188

tat | the architectural team

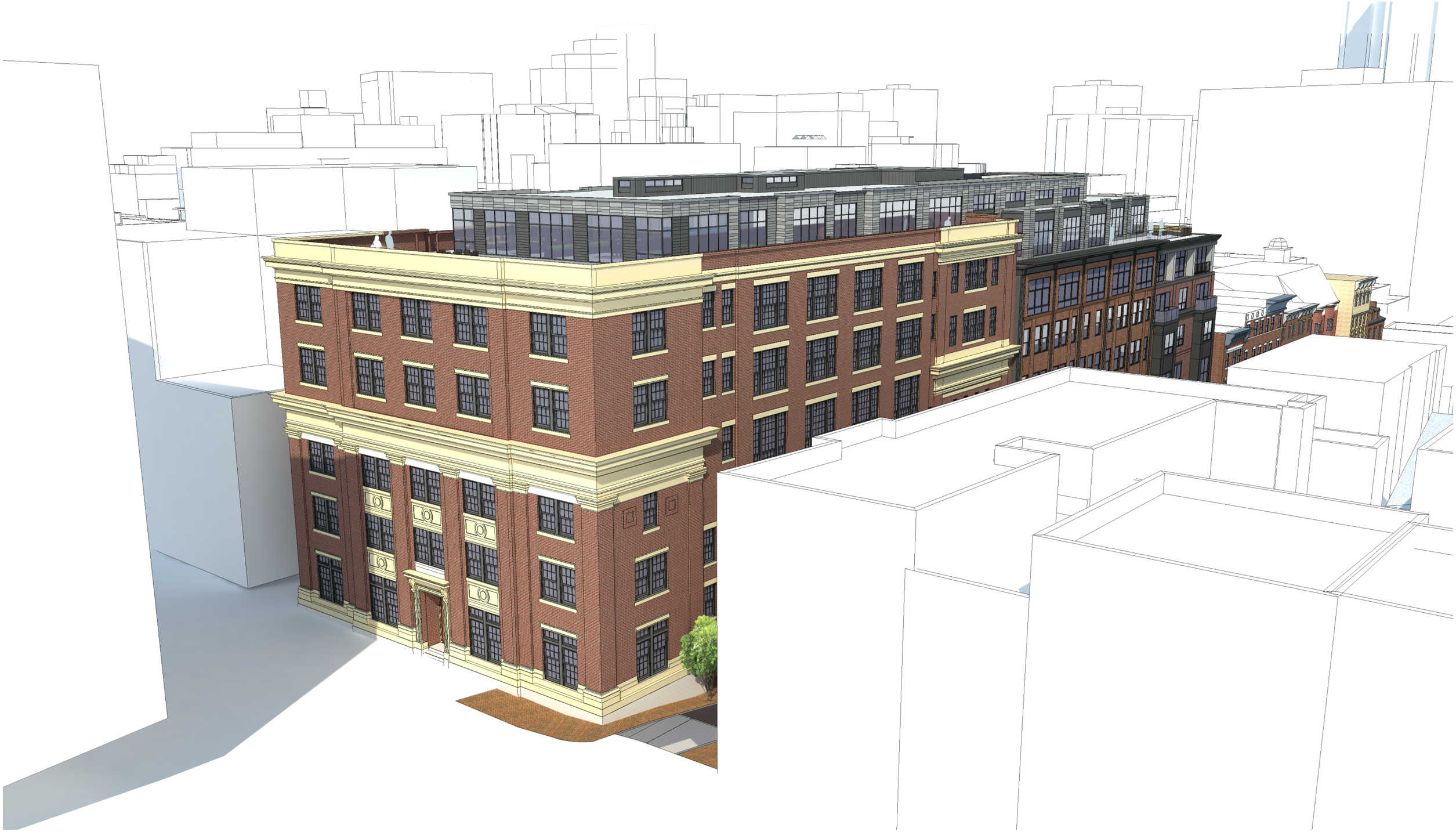

Archer | Donahue

Boston, MA

Aerial View
October 20, 2016 Design

November 2, 2016

DEVELOPER : JDMD Owner, LLC

ARCHITECT : The Architectural Team

14188

tat | the architectural team

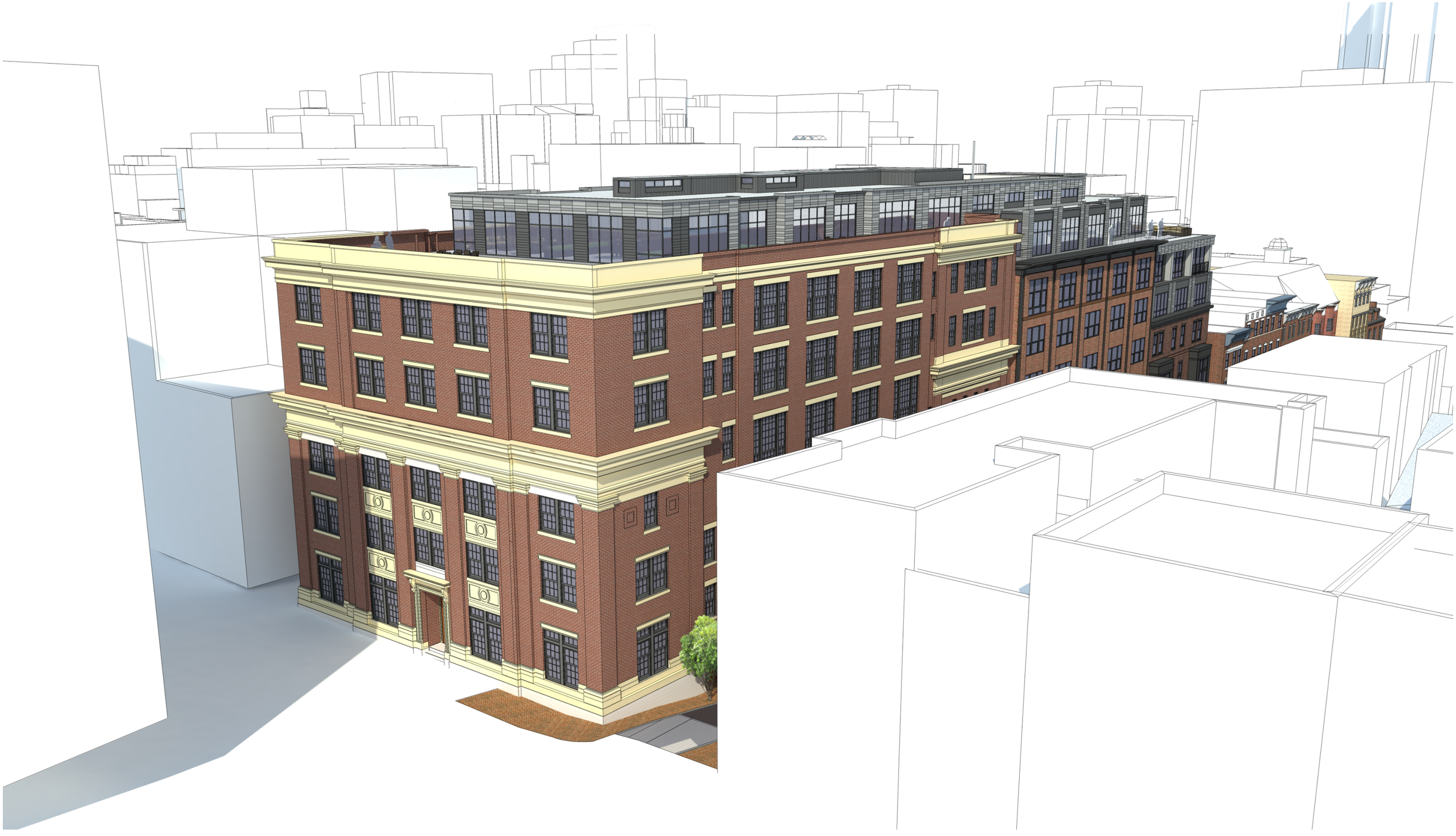

Archer | Donahue

Boston, MA

Aerial View
Revised Design

November 2, 2016

DEVELOPER : JDMD Owner, LLC

ARCHITECT : The Architectural Team

14188

tat | the architectural team

Archer | Donahue

Boston, MA

Temple Street Elevation
with Existing Mechanical Overlay
October 20, 2016 Design

November 2, 2016

DEVELOPER : JDMD Owner, LLC

ARCHITECT : The Architectural Team

14188

tat | the architectural team

Archer | Donahue

Boston, MA

Temple Street Elevation
with Existing Mechanical Overlay
Revised Design

November 2, 2016

DEVELOPER : JDMD Owner, LLC

ARCHITECT : The Architectural Team

14188

tat | the architectural team

Archer | Donahue

Boston, MA

Temple Street
Existing Elevation

November 2, 2016

DEVELOPER : JDMD Owner, LLC

ARCHITECT : The Architectural Team

14188

tat | the architectural team

Archer | Donahue

Boston, MA

Temple Street
October 20, 2016 Design

November 2, 2016

DEVELOPER : JDMD Owner, LLC

ARCHITECT : The Architectural Team

14188

tat | the architectural team

Archer | Donahue

Boston, MA

Temple Street
Proposed Elevation

November 2, 2016

DEVELOPER : JDMD Owner, LLC

ARCHITECT : The Architectural Team

14188

tat | the architectural team

Archer | Donahue
Boston, MA

Derne Street
Existing Elevation

November 2, 2016
DEVELOPER : JDMD Owner, LLC
ARCHITECT : The Architectural Team

14188

tat | the architectural team

Archer | Donahue

Boston, MA

Derne Street Elevation
October 20, 2016 Design

November 2, 2016

DEVELOPER : JDMD Owner, LLC

ARCHITECT : The Architectural Team

14188

tat | the architectural team

Archer | Donahue

Boston, MA

Derne Street Elevation
Revised Design

November 2, 2016

DEVELOPER : JDMD Owner, LLC

ARCHITECT : The Architectural Team

14188

tat | the architectural team

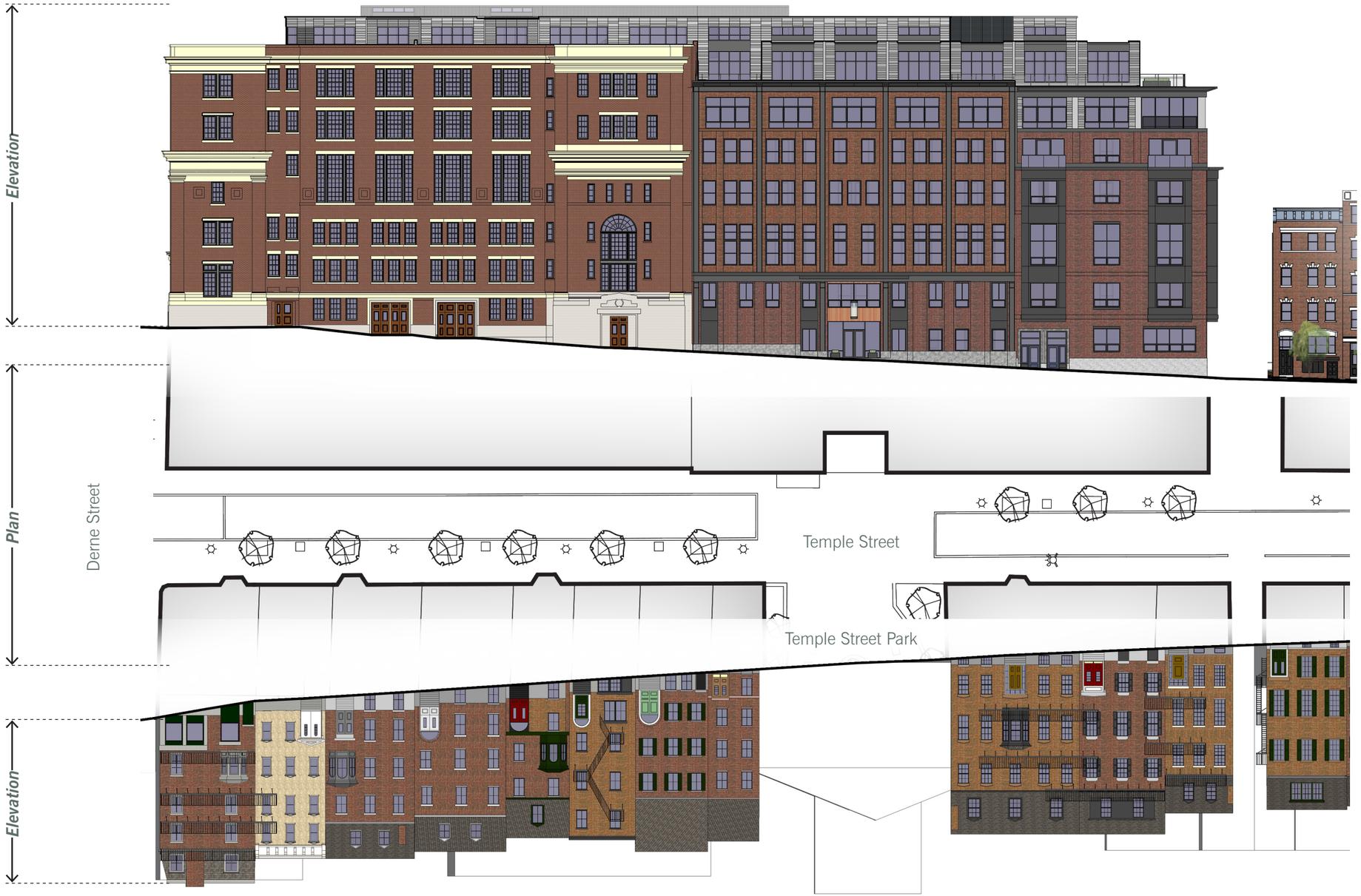

Archer | Donahue
Boston, MA

Temple Street
Elevation Comparison
October 20, 2016 Design

November 2, 2016
DEVELOPER : JDMD Owner, LLC
ARCHITECT : The Architectural Team

14188

tat | the architectural team

Archer | Donahue
Boston, MA

Temple Street
Elevation Comparison
Revised Design

November 2, 2016
DEVELOPER : JDMD Owner, LLC
ARCHITECT : The Architectural Team

14188

tat | the architectural team

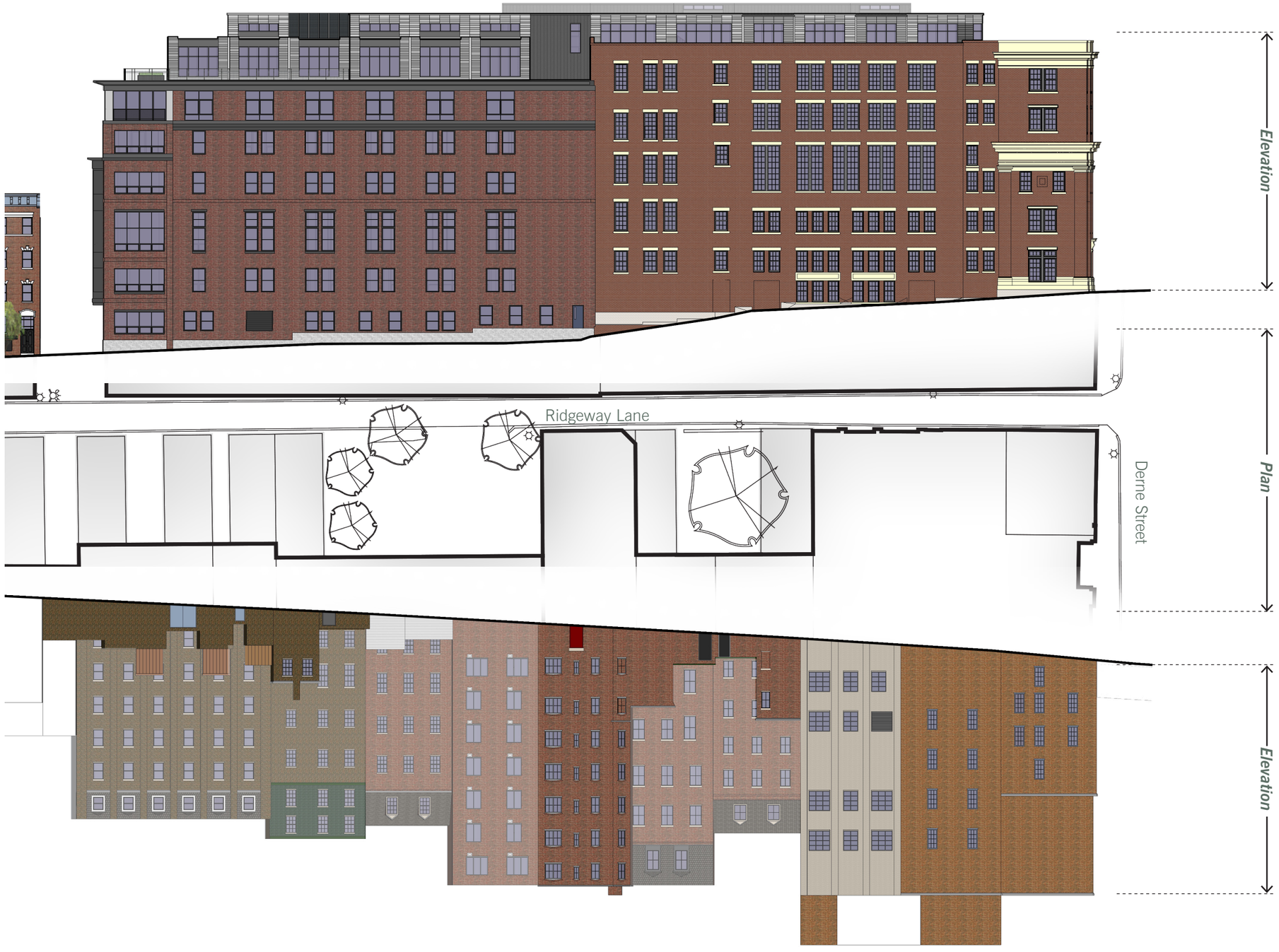

Archer | Donahue
Boston, MA

Ridgeway Lane
Elevation Comparison
October 20, 2016 Design

November 2, 2016
DEVELOPER : JDMD Owner, LLC
ARCHITECT : The Architectural Team

14188

tat | the architectural team

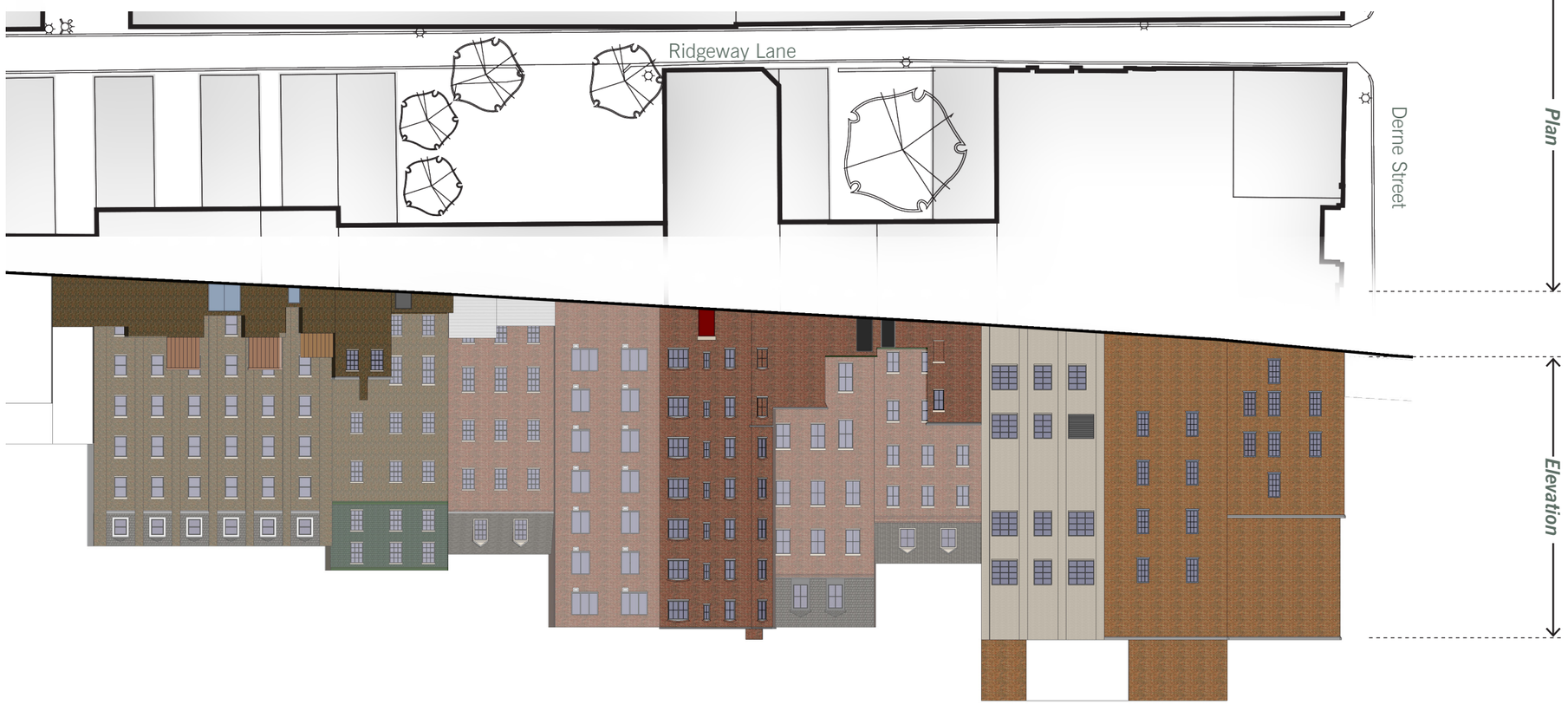

Archer | Donahue

Boston, MA

Ridgeway Lane
Elevation Comparison
REvised Design

November 2, 2016

DEVELOPER : JDMD Owner, LLC

ARCHITECT : The Architectural Team

14188

tat | the architectural team

ONE
structural grid

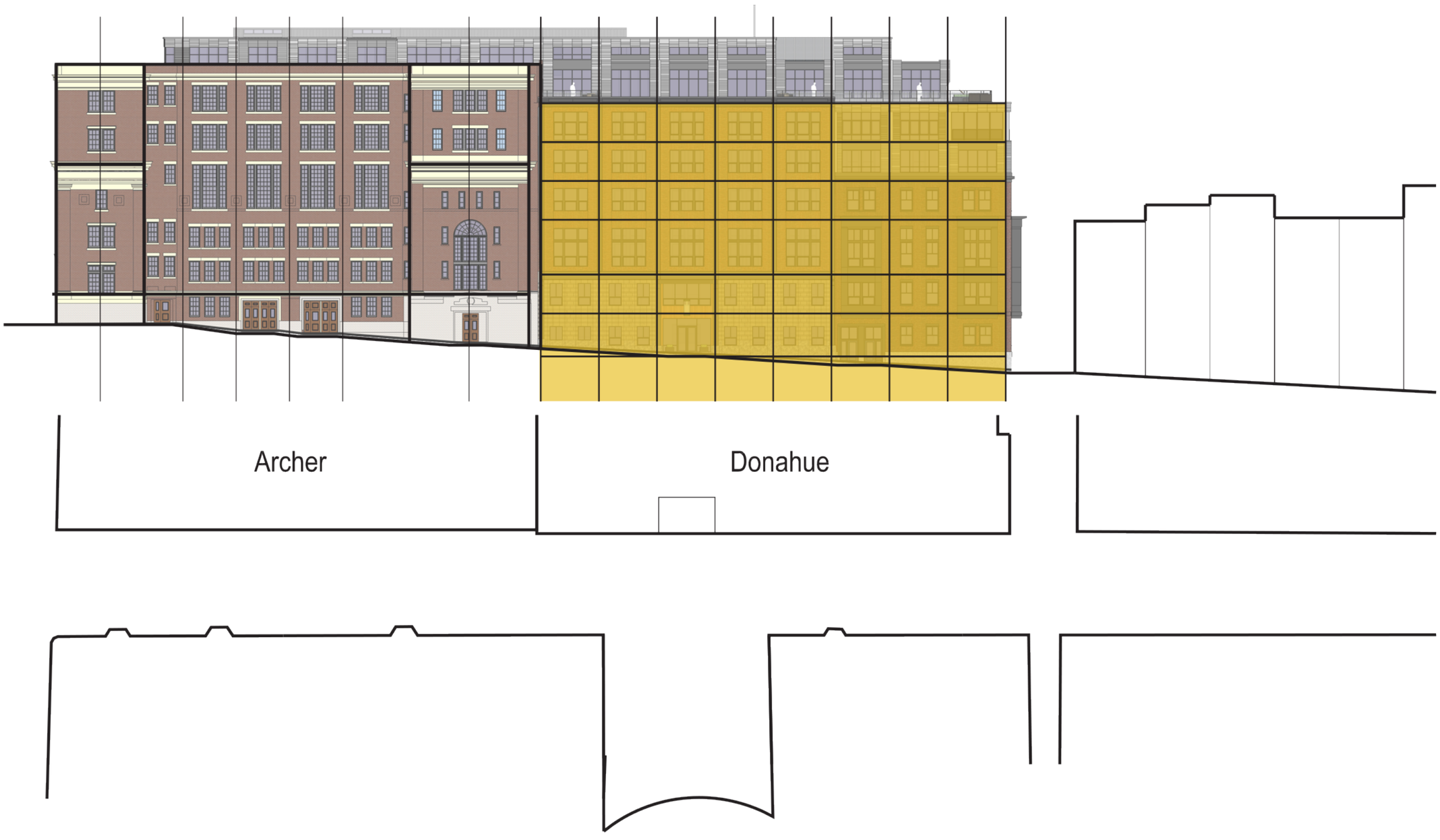

Archer | Donahue

Boston, MA

Elevation Diagram

November 2, 2016

DEVELOPER : JDMD Owner, LLC

ARCHITECT : The Architectural Team

14188

tat | the architectural team

TWO

1) *organize* facade opposite park

2) roof line *follows* slope of hill

Archer | Donahue

Boston, MA

Elevation Diagram

November 2, 2016

DEVELOPER : JDMD Owner, LLC

ARCHITECT : The Architectural Team

14188

tat | the architectural team

THREE

1) metal reveals between masonry *articulate* width of grid and neighborhood parcels

2) bays *introduce* a smaller scale

Archer | Donahue

Boston, MA

Elevation Diagram

November 2, 2016

DEVELOPER : JDMD Owner, LLC

ARCHITECT : The Architectural Team

14188

tat | the architectural team

FOUR

1) two grid base *articulates* entry

2) columns *reveal* grid

3) upper Levels *stepped* away from edge

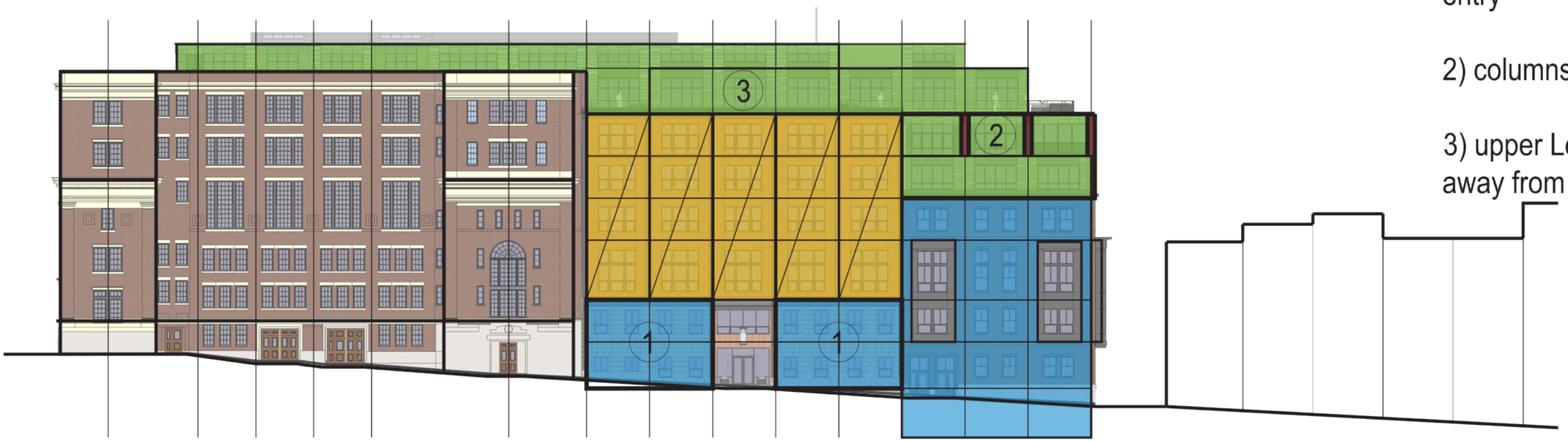

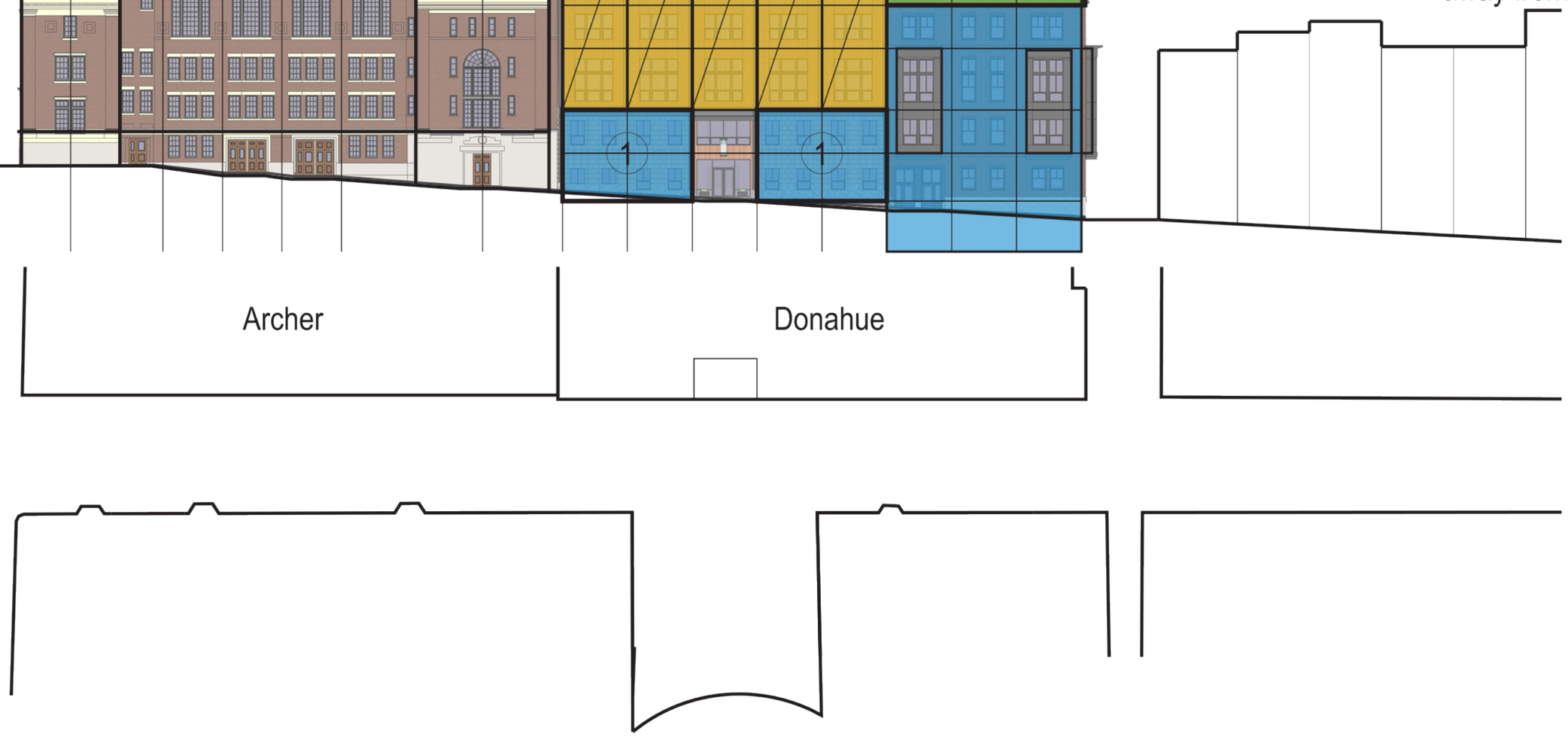

Archer | Donahue

Boston, MA

Elevation Diagram

November 2, 2016

DEVELOPER : JDMD Owner, LLC

ARCHITECT : The Architectural Team

14188

tat | the architectural team

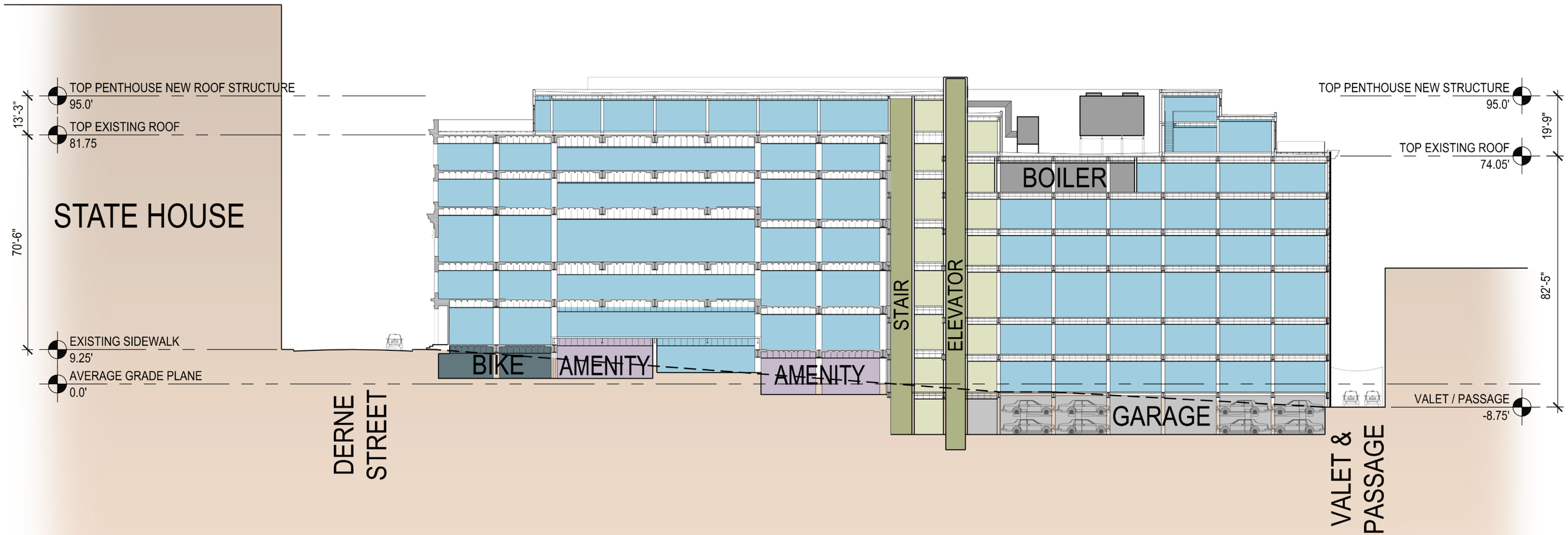

1 LONGITUDINAL SECTION THROUGH MECHANICAL ENCLOSURE

SCALE: 1/32" = 1'-0"

Archer | Donahue
Boston, MA

West Building Section

November 2, 2016

DEVELOPER : JDMD Owner, LLC

ARCHITECT : The Architectural Team

14188

tat | the architectural team

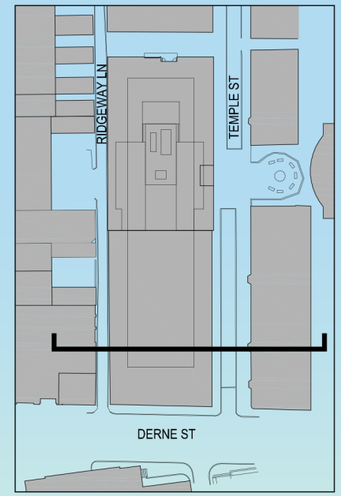

KEY PLAN

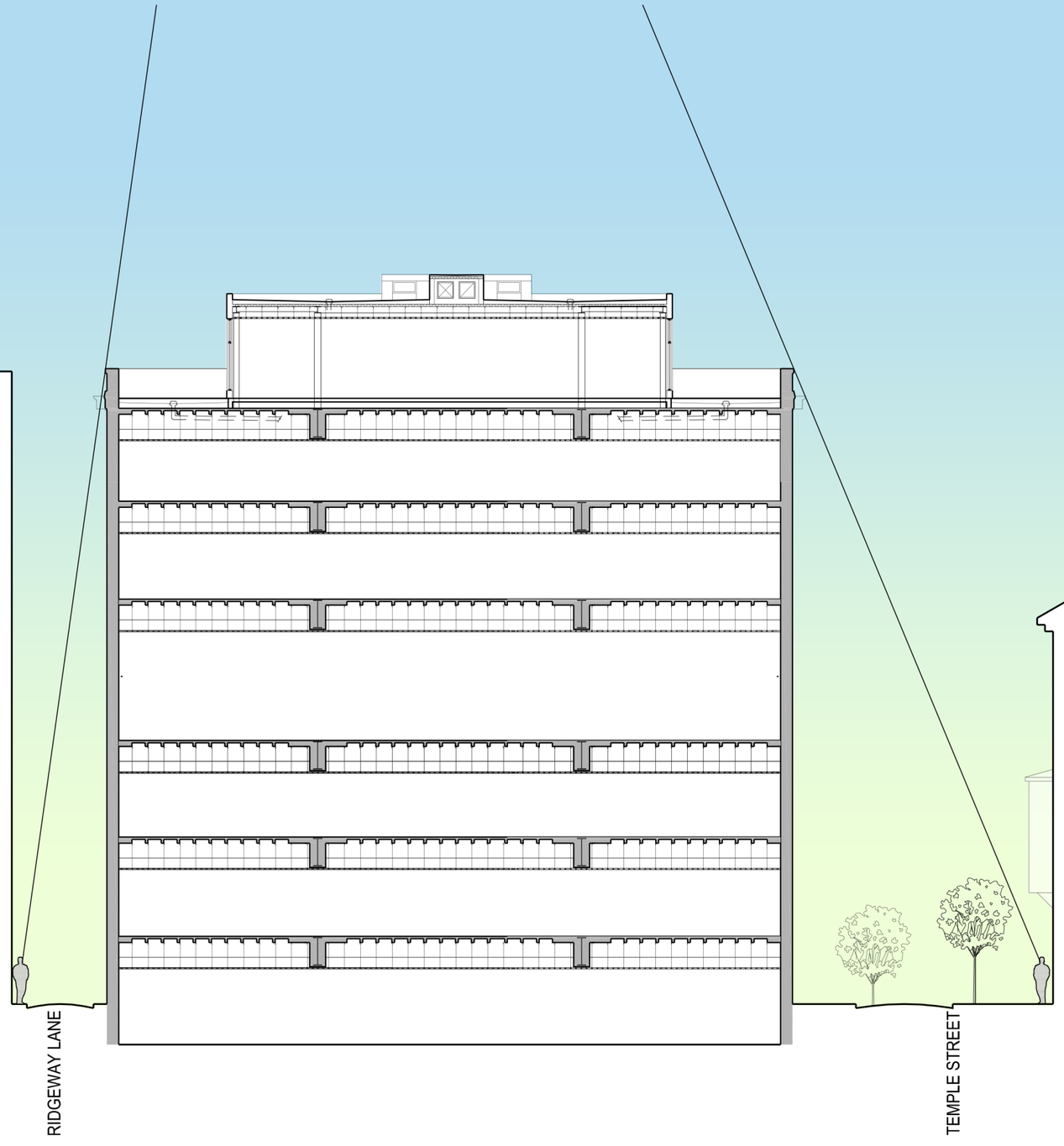

Archer | Donahue

Boston, MA

Sight Line - Section 1

November 2, 2016

DEVELOPER : JDMD Owner, LLC

ARCHITECT : The Architectural Team

14188

tat | the architectural team

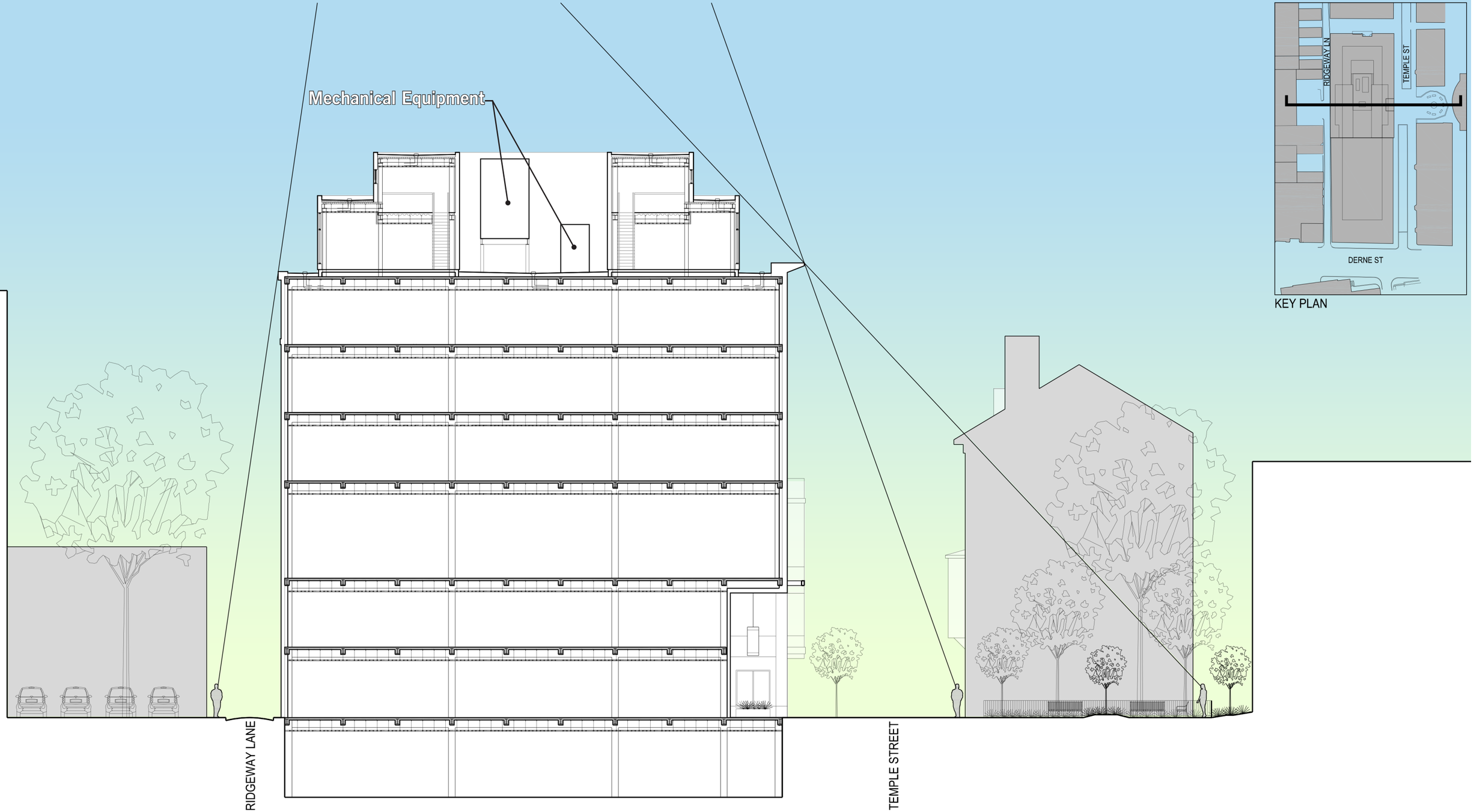

KEY PLAN

Archer | Donahue

Boston, MA

Sight Line - Section 2

November 2, 2016

DEVELOPER : JDMD Owner, LLC

ARCHITECT : The Architectural Team

14188

tat | the architectural team

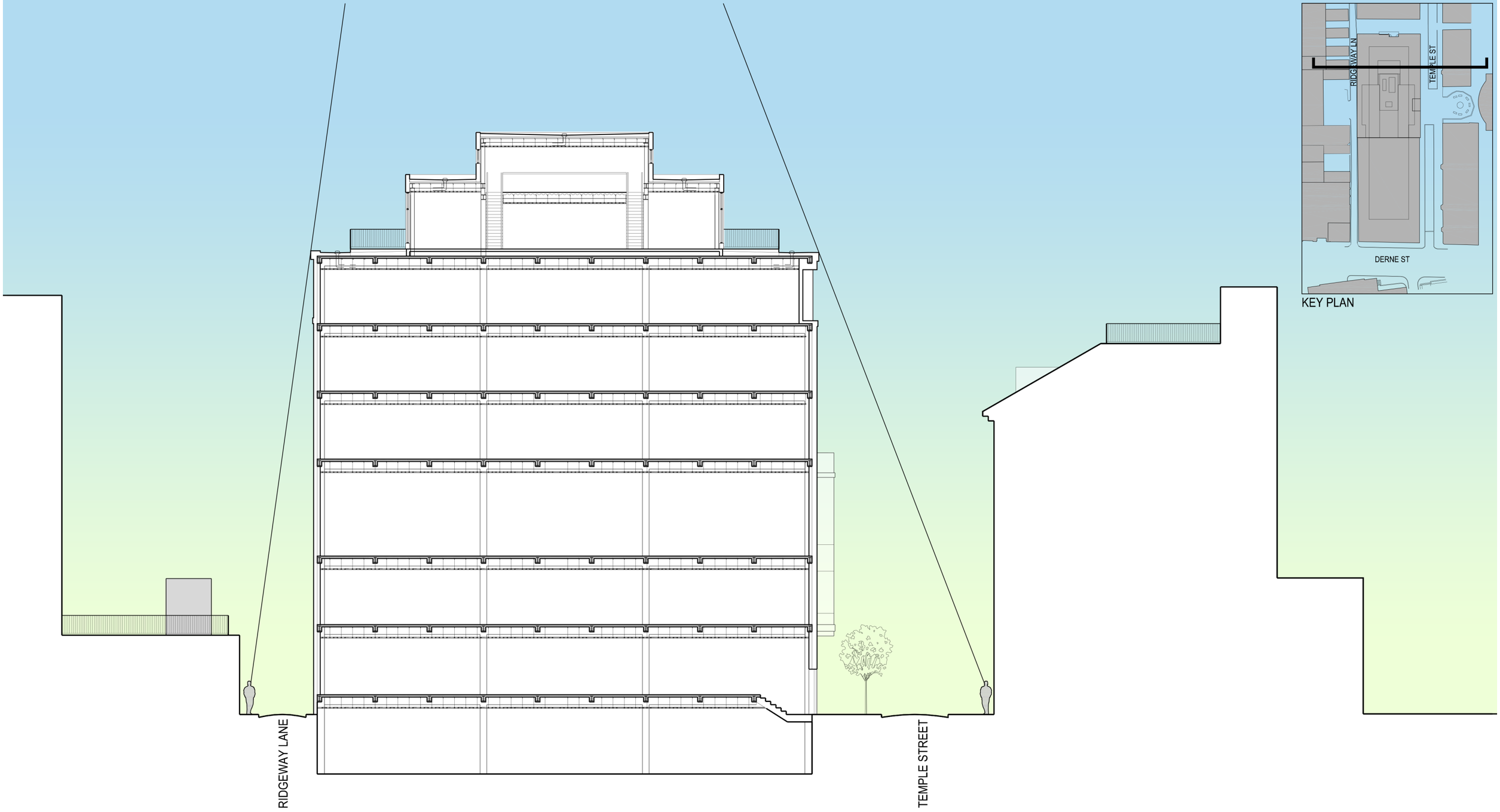

KEY PLAN

Archer | Donahue

Boston, MA

Sight Line - Section 3

November 2, 2016

DEVELOPER : JDMD Owner, LLC

ARCHITECT : The Architectural Team

14188

tat | the architectural team

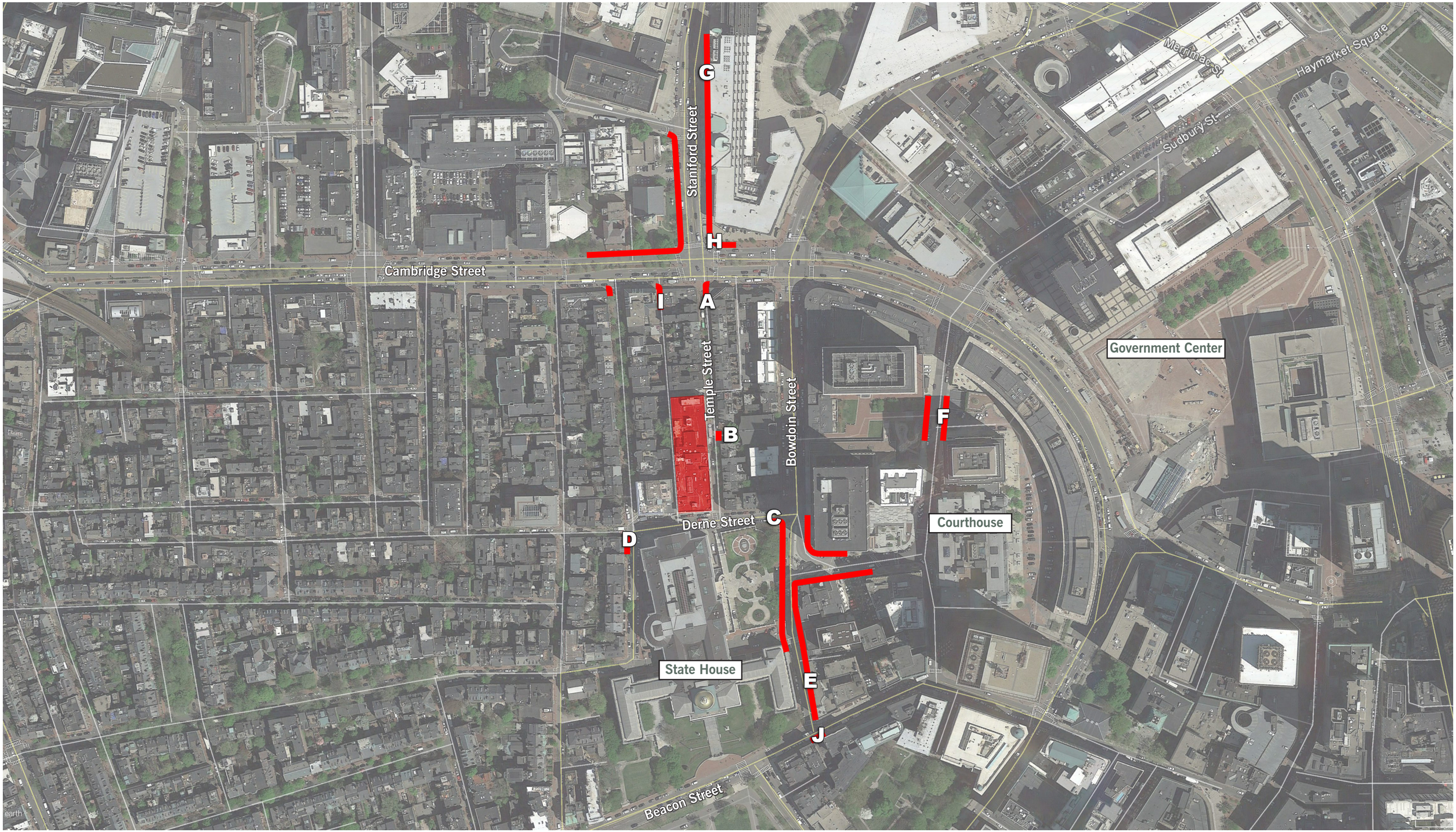

Archer | Donahue
Boston, MA

Seventh Floor
Visibility Neighborhood Plan

November 2, 2016
DEVELOPER : JDMD Owner, LLC
ARCHITECT : The Architectural Team

14188

tat | the architectural team

Archer | Donahue

Boston, MA

Neighborhood Photos

November 2, 2016

DEVELOPER : JDMD Owner, LLC

ARCHITECT : The Architectural Team

14188

tat | the architectural team

C

D

Archer | Donahue

Boston, MA

Neighborhood Photos

November 2, 2016

DEVELOPER : JDMD Owner, LLC

ARCHITECT : The Architectural Team

14188

tat | the architectural team

E

F

Archer | Donahue

Boston, MA

Neighborhood Photos

November 2, 2016

DEVELOPER : JDMD Owner, LLC

ARCHITECT : The Architectural Team

14188

tat | the architectural team

Archer | Donahue

Boston, MA

Neighborhood Photos

November 2, 2016

DEVELOPER : JDMD Owner, LLC

ARCHITECT : The Architectural Team

14188

tat | the architectural team

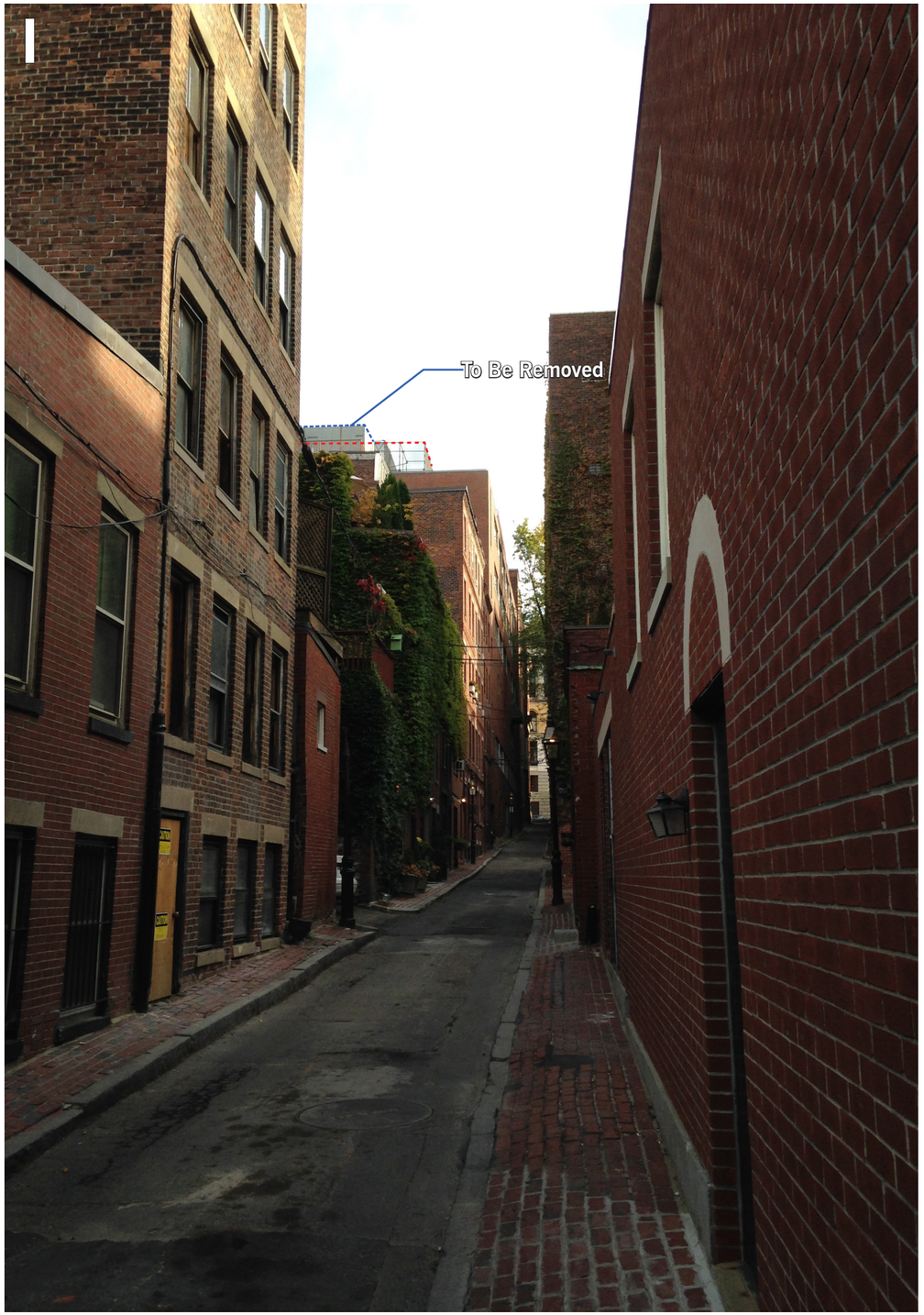

Archer | Donahue

Boston, MA

Neighborhood Photos

November 2, 2016

DEVELOPER : JDMD Owner, LLC

ARCHITECT : The Architectural Team

14188

tat | the architectural team

Archer | Donahue

Boston, MA

Derne Street View - Existing

November 2, 2016

DEVELOPER : JDMD Owner, LLC

ARCHITECT : The Architectural Team

14188

tat | the architectural team

Archer | Donahue

Boston, MA

Derne Street View - Proposed

November 2, 2016

DEVELOPER : JDMD Owner, LLC

ARCHITECT : The Architectural Team

14188

tat | the architectural team

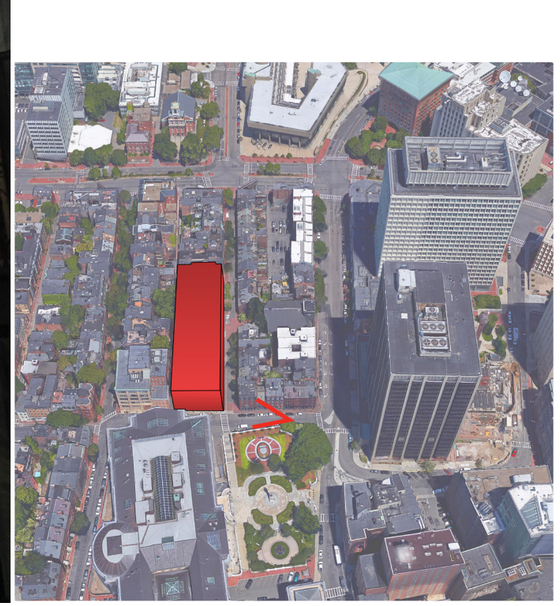

Archer | Donahue

Boston, MA

Derne Street View - Existing

November 2, 2016

DEVELOPER : JDMD Owner, LLC

ARCHITECT : The Architectural Team

14188

tat | the architectural team

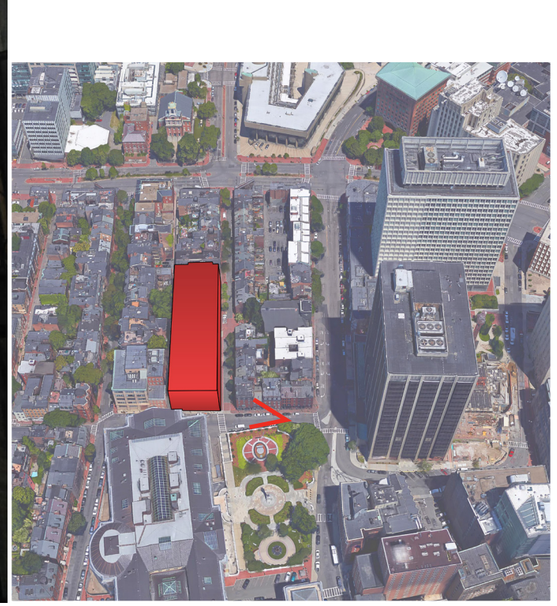

Archer | Donahue

Boston, MA

Derne Street View - Proposed

November 2, 2016

DEVELOPER : JDMD Owner, LLC

ARCHITECT : The Architectural Team

14188

tat | the architectural team

Archer | Donahue
Boston, MA

Temple Street View - Existing

November 2, 2016
DEVELOPER : JDMD Owner, LLC
ARCHITECT : The Architectural Team

14188

tat | the architectural team

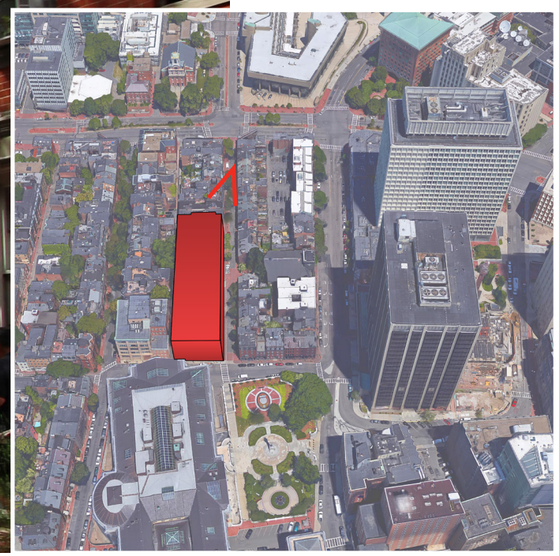

Archer | Donahue

Boston, MA

Temple Street View
October 20, 2016 Design

November 2, 2016

DEVELOPER : JDMD Owner, LLC

ARCHITECT : The Architectural Team

14188

tat | the architectural team

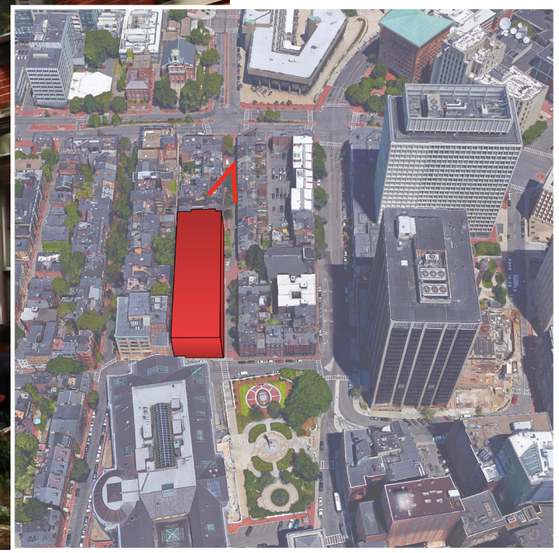

Archer | Donahue

Boston, MA

Temple Street View
Proposed Design

November 2, 2016

DEVELOPER : JDMD Owner, LLC

ARCHITECT : The Architectural Team

14188

tat | the architectural team

Archer | Donahue

Boston, MA

Temple Street Park View - Existing

November 2, 2016

DEVELOPER : JDMD Owner, LLC

ARCHITECT : The Architectural Team

14188

tat | the architectural team

Archer | Donahue

Boston, MA

Temple Street Park View - October 20,2016 Design

November 2, 2016

DEVELOPER : JDMD Owner, LLC

ARCHITECT : The Architectural Team

14188

tat | the architectural team

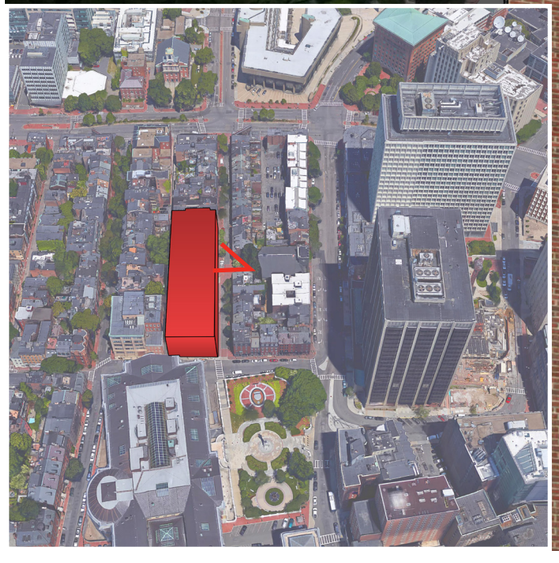

Archer | Donahue

Boston, MA

Temple Street Park View - Proposed Design

November 2, 2016

DEVELOPER : JDMD Owner, LLC

ARCHITECT : The Architectural Team

14188

tat | the architectural team

Archer | Donahue

Boston, MA

Temple Street Entry
October 20, 2016 Design

November 2, 2016

DEVELOPER : JDMD Owner, LLC

ARCHITECT : The Architectural Team

14188

tat | the architectural team

Archer | Donahue

Boston, MA

Temple Street Entry
Proposed Design

November 2, 2016

DEVELOPER : JDMD Owner, LLC

ARCHITECT : The Architectural Team

14188

tat | the architectural team

Archer | Donahue

Boston, MA

Temple Street View
October 20, 2016 Design

November 2, 2016

DEVELOPER : JDMD Owner, LLC

ARCHITECT : The Architectural Team

14188

tat | the architectural team

Archer | Donahue

Boston, MA

Temple Street View
October 20, 2016 Design

November 2, 2016

DEVELOPER : JDMD Owner, LLC

ARCHITECT : The Architectural Team

14188

tat | the architectural team

Archer | Donahue

Boston, MA

Material Palette Inspiration
Wood Finish on Archer Building

November 2, 2016

DEVELOPER : JDMD Owner, LLC

ARCHITECT : The Architectural Team

14188

tat | the architectural team

Archer | Donahue

Boston, MA

Rusticated Base Example Photos

November 2, 2016

DEVELOPER : JDMD Owner, LLC

ARCHITECT : The Architectural Team

14188

tat | the architectural team

Archer | Donahue

Boston, MA

Material Palette Inspiration
Metal Bay Windows

November 2, 2016

DEVELOPER : JDMD Owner, LLC

ARCHITECT : The Architectural Team

tat | the architectural team

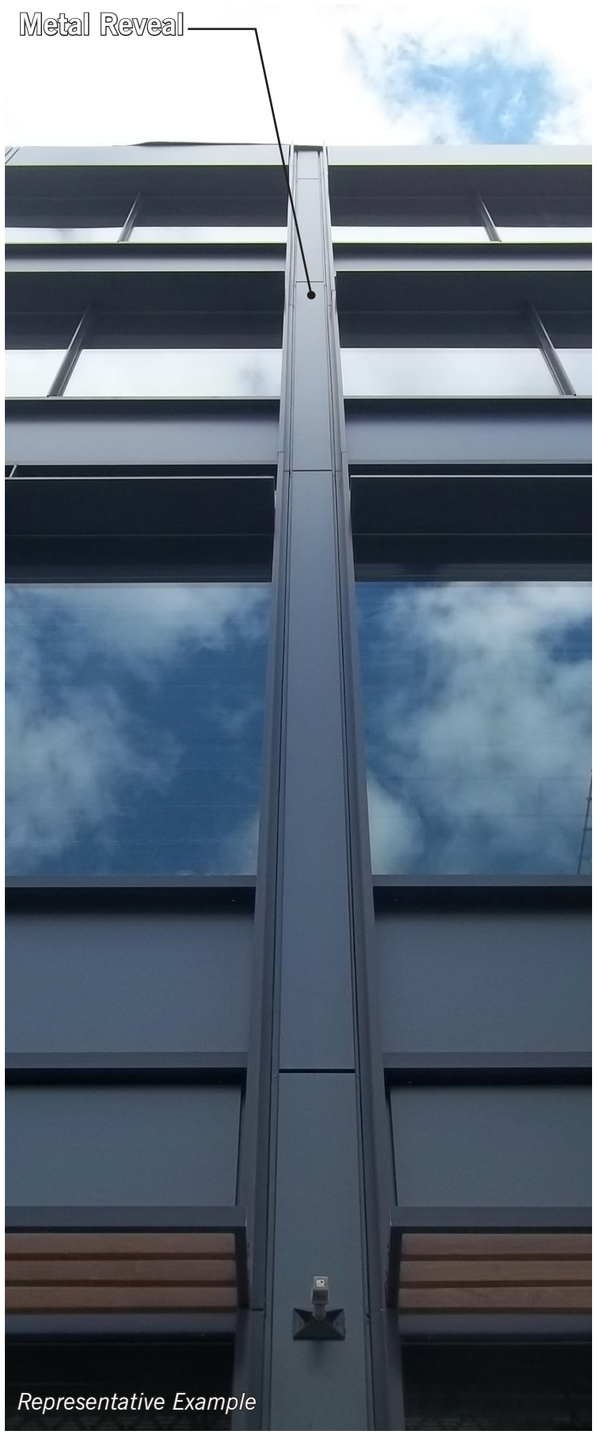

Representative Example

Representative Example

Proposed Rendering

Representative Example

Archer | Donahue

Boston, MA

Representative Material Palette

November 2, 2016

DEVELOPER : JDMD Owner, LLC

ARCHITECT : The Architectural Team

14188

tat | the architectural team

Archer | Donahue

Boston, MA

Material Palette Inspiration
Slate Roof &
Metal-Clad Penthouse

November 2, 2016

DEVELOPER : JDMD Owner, LLC

ARCHITECT : The Architectural Team

14188

tat | the architectural team

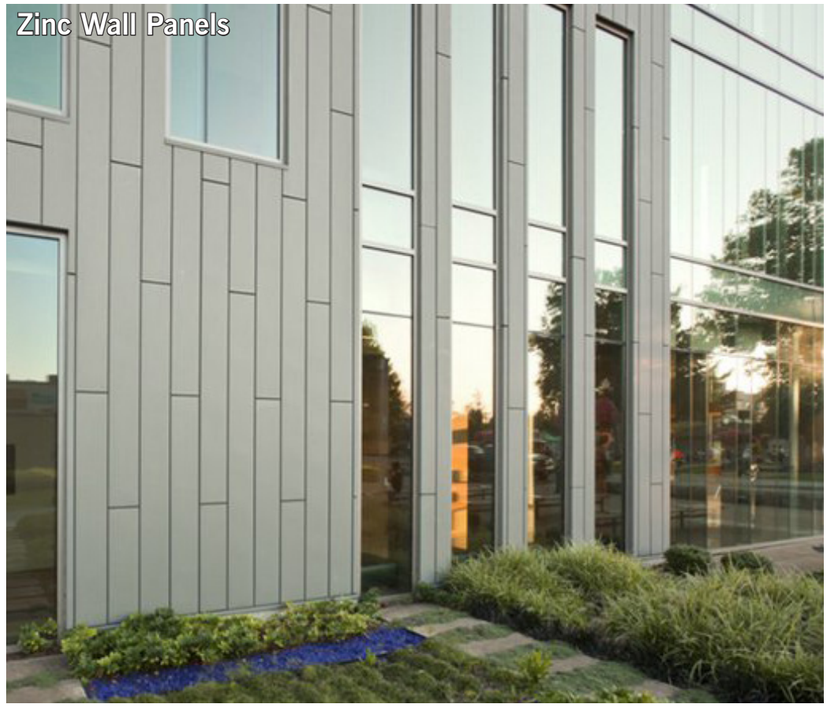

Archer | Donahue

Boston, MA

Representative Material Palette

November 2, 2016

DEVELOPER : JDMD Owner, LLC

ARCHITECT : The Architectural Team

14188

tat | the architectural team

Temple Street Elevation

Alley (North) Elevation

Archer | Donahue

Boston, MA

Proposed Building Elevations

November 2, 2016

DEVELOPER : JDMD Owner, LLC

ARCHITECT : The Architectural Team

14188

tat | the architectural team

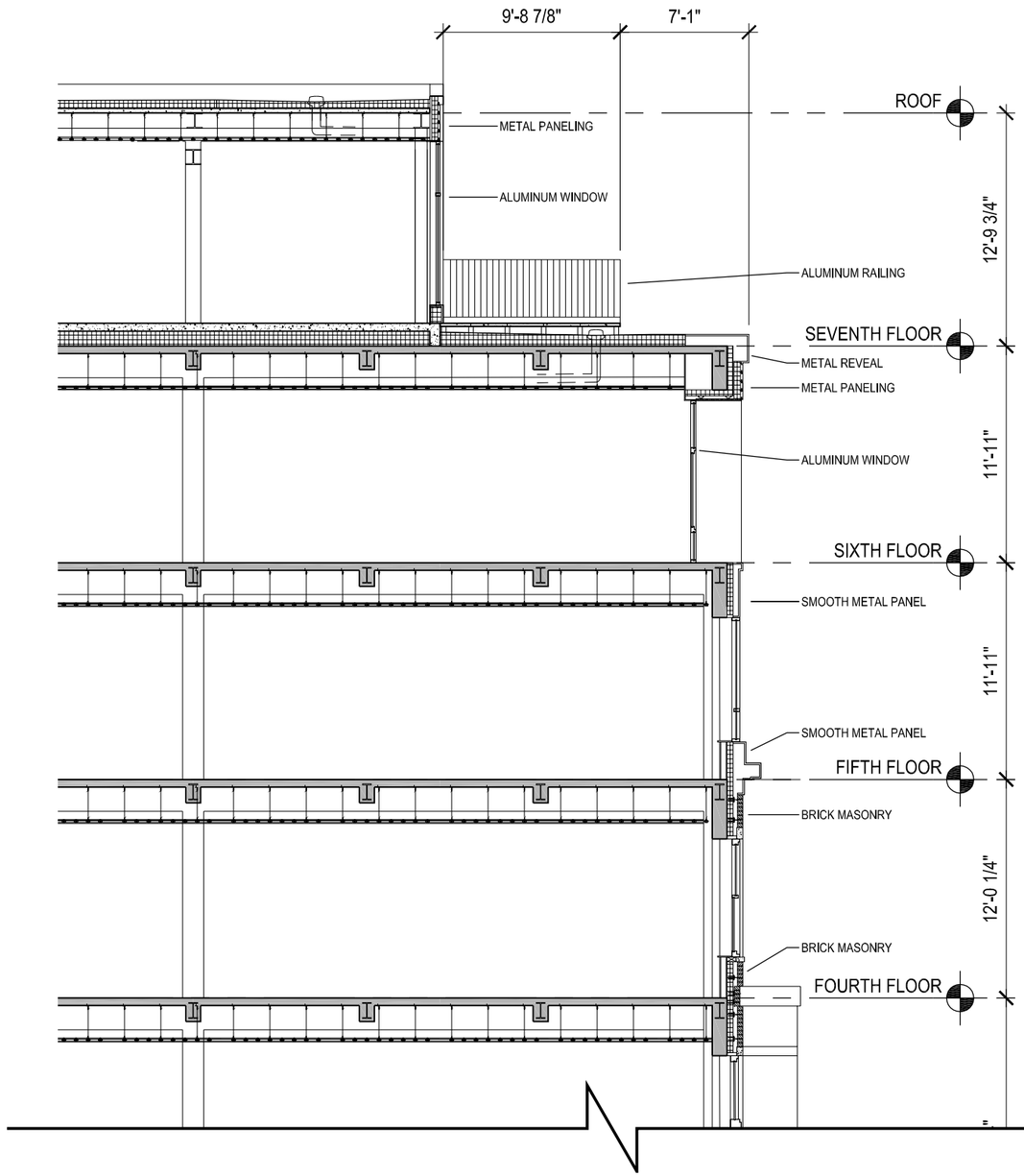

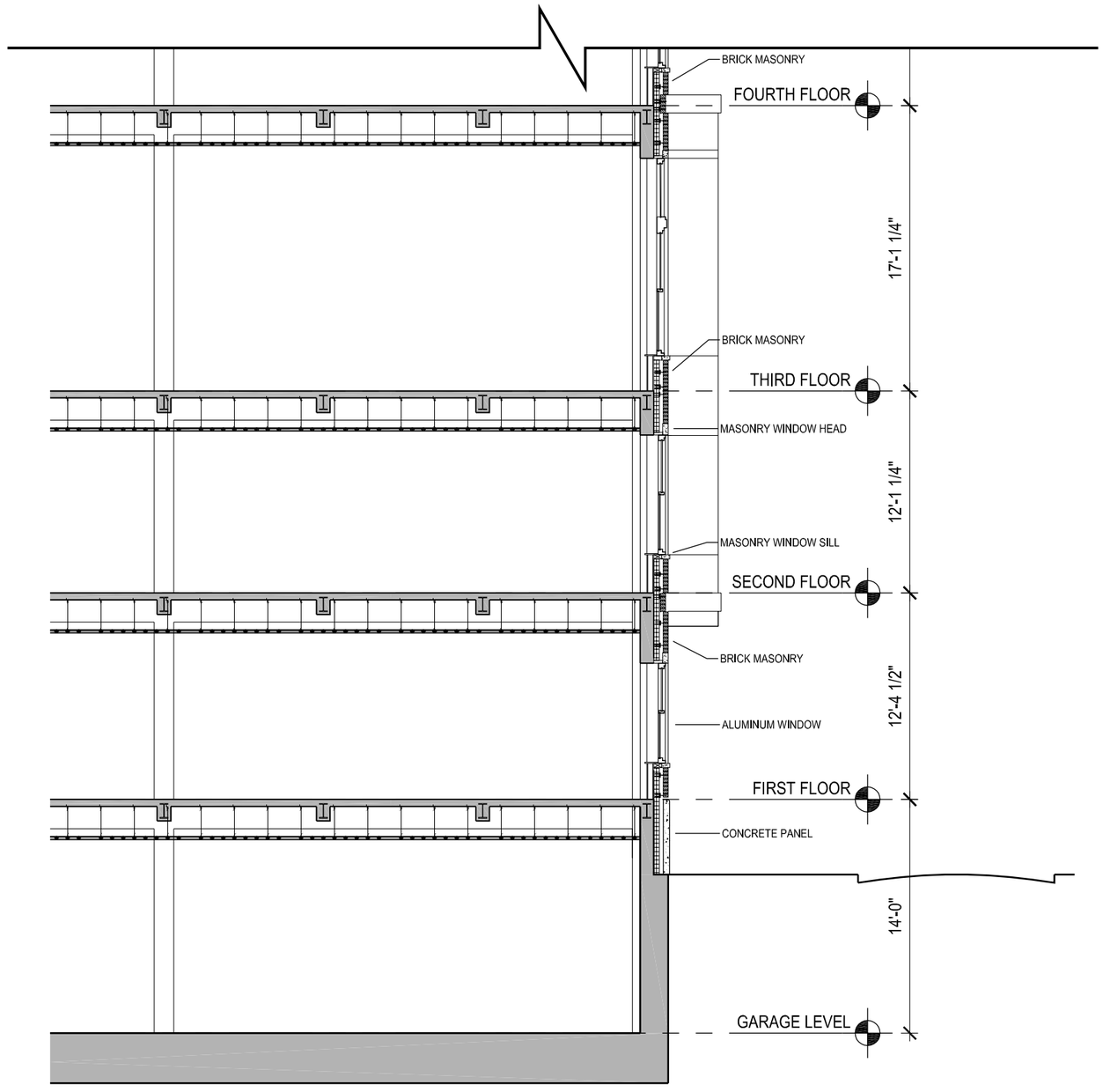

Archer | Donahue

Boston, MA

Wall Sections 1

November 2, 2016

DEVELOPER : JDMD Owner, LLC

ARCHITECT : The Architectural Team

14188

tat | the architectural team

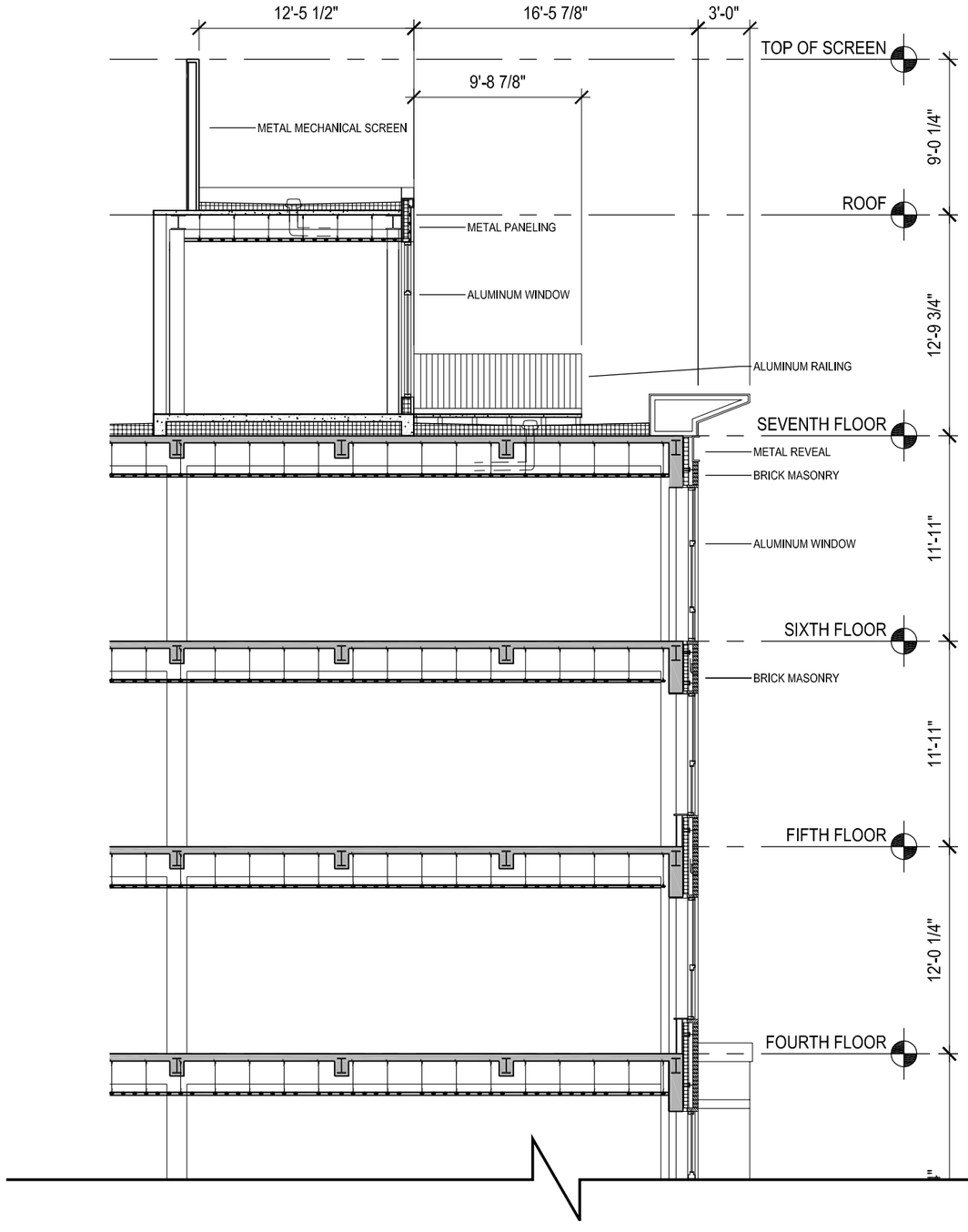

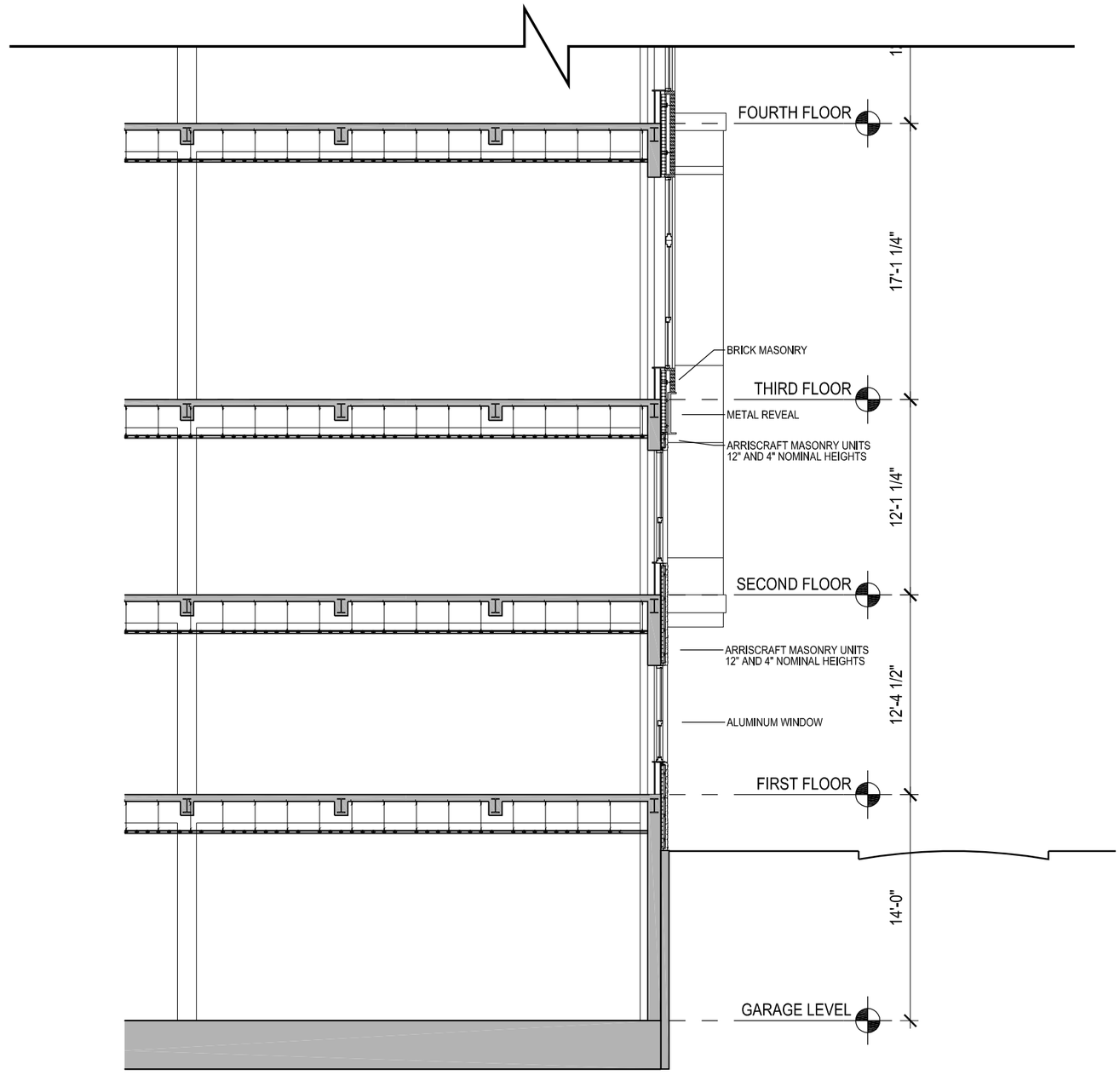

Archer | Donahue

Boston, MA

Wall Sections 2

November 2, 2016

DEVELOPER : JDMD Owner, LLC

ARCHITECT : The Architectural Team

14188

tat | the architectural team

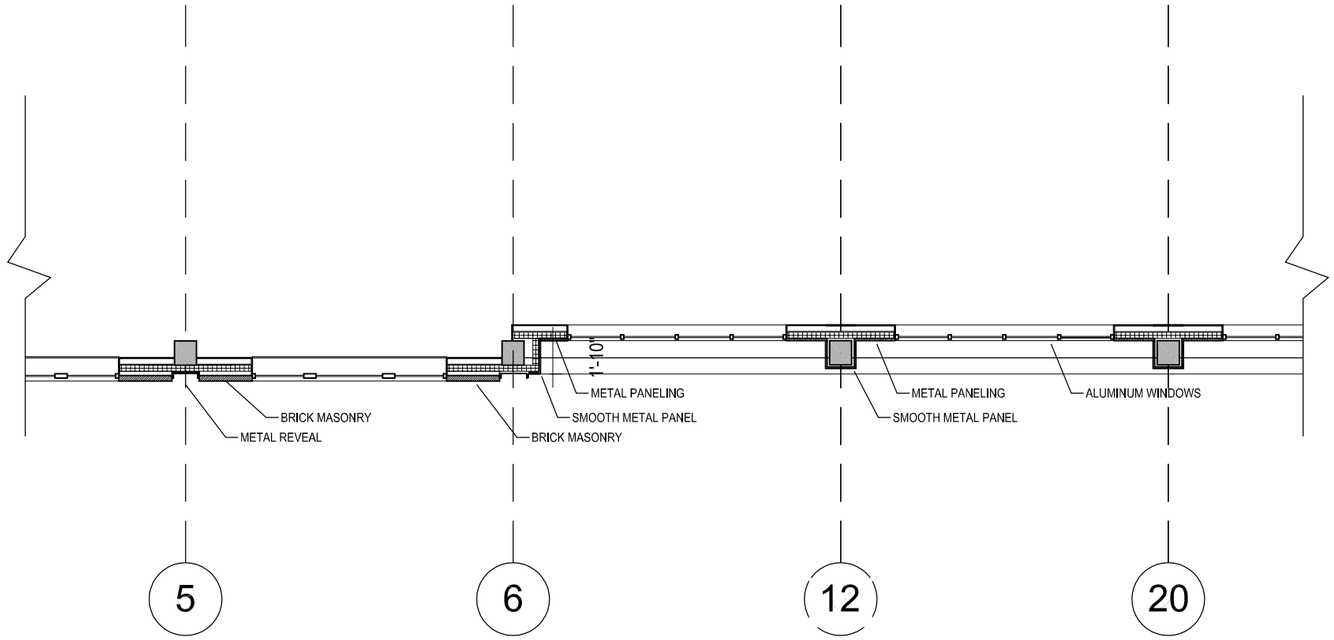

Archer | Donahue
Boston, MA

Floor Section 3

November 2, 2016
DEVELOPER : JDMD Owner, LLC
ARCHITECT : The Architectural Team

14188

tat | the architectural team

Archer | Donahue

Boston, MA

Temple Street Entry

November 2, 2016

DEVELOPER : JDMD Owner, LLC

ARCHITECT : The Architectural Team

14188

tat | the architectural team

Archer | Donahue

Boston, MA

Site Plan

November 2, 2016

DEVELOPER : JDMD Owner, LLC

ARCHITECT : The Architectural Team

14188

tat | the architectural team

Archer | Donahue

Boston, MA

Existing View of North Alley

November 2, 2016

DEVELOPER : JDMD Owner, LLC

ARCHITECT : The Architectural Team

14188

tat | the architectural team

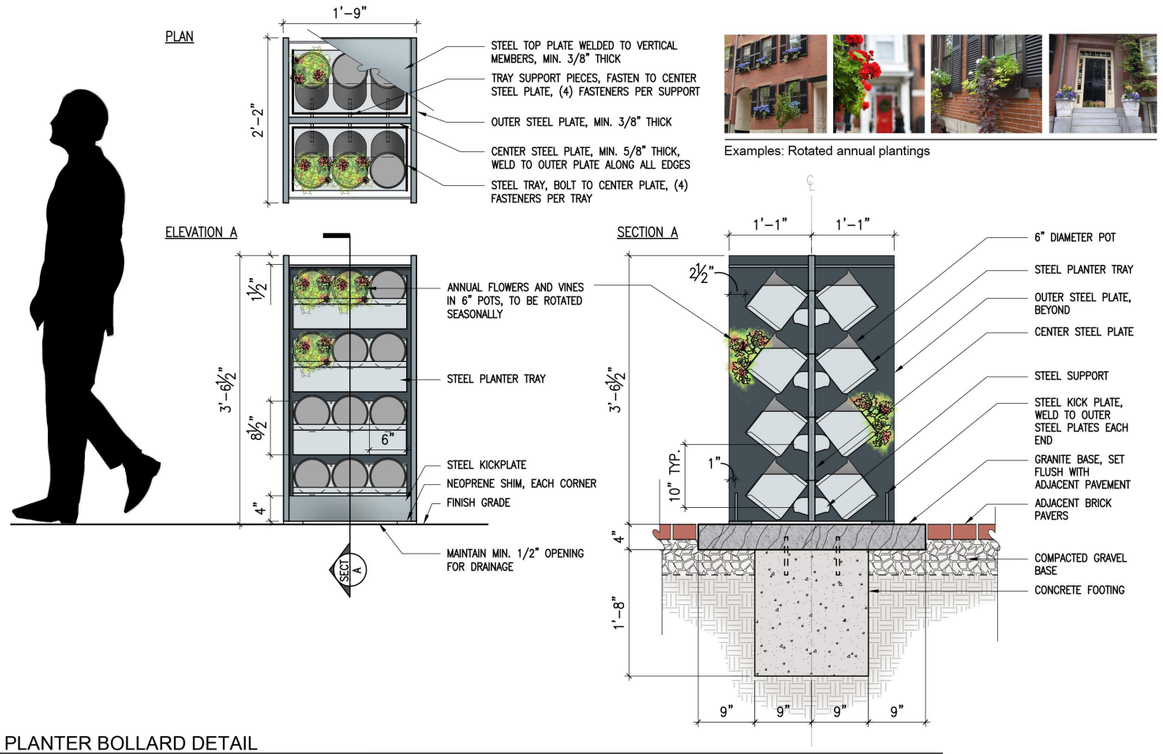

Examples: Rotated annual plantings

PLANTER BOLLARD DETAIL

Archer Donahue Building, Boston, MA

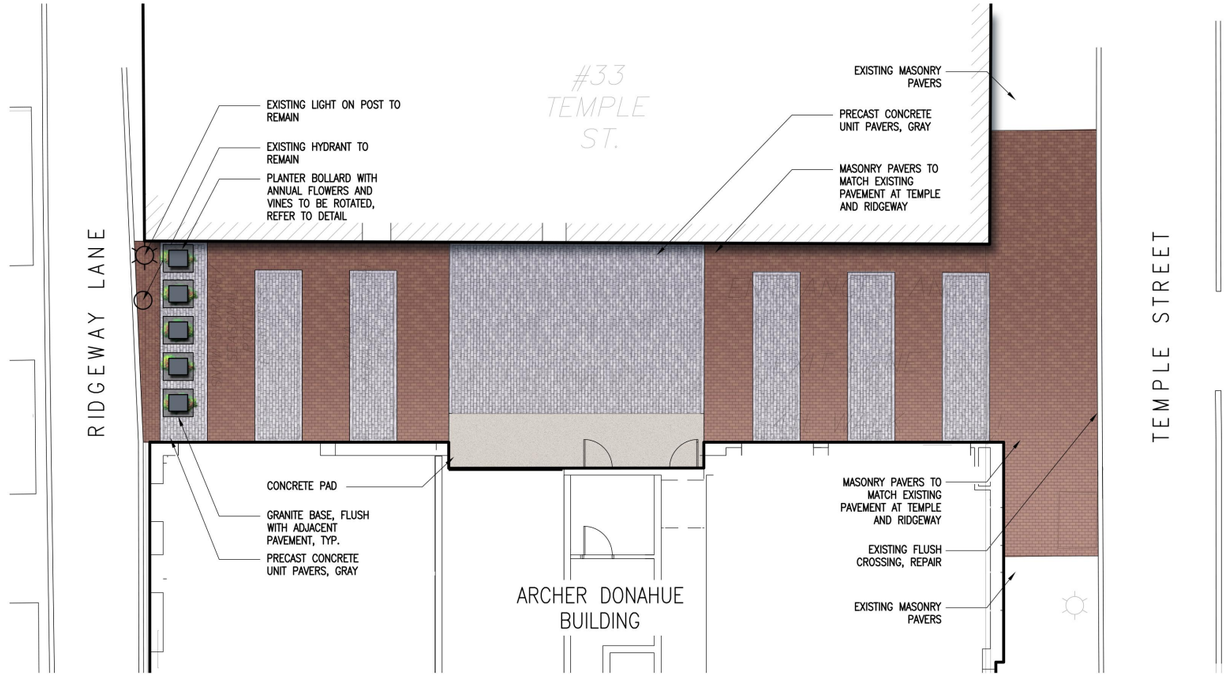

PLANTER BOLLARD DETAIL

Archer Donahue Building, Boston, MA

VIEW WEST FROM TEMPLE STREET

Archer Donahue Building, Boston, MA

Archer | Donahue

Boston, MA

North Alley Landscape Plan

November 2, 2016

DEVELOPER : JDMD Owner, LLC

ARCHITECT : The Architectural Team

14188

Copley Wolff Design Group
Landscape Architects & Planners

tat | the architectural team

Archer | Donahue

Boston, MA

Archer Circa 1920
Original Windows

November 2, 2016

DEVELOPER : JDMD Owner, LLC

ARCHITECT : The Architectural Team

14188

tat | the architectural team

Archer | Donahue
Boston, MA

Archer Circa 1937
2 Stories Added with Sign

November 2, 2016
DEVELOPER : JDMD Owner, LLC
ARCHITECT : The Architectural Team

14188

tat | the architectural team

Archer | Donahue

Boston, MA

Archer Circa 2016
Sign & Pediment Removed
& Windows Replaced

November 2, 2016

DEVELOPER : JDMD Owner, LLC

ARCHITECT : The Architectural Team

14188

tat | the architectural team

Archer | Donahue
Boston, MA

Archer Original Windows

November 2, 2016
DEVELOPER : JDMD Owner, LLC
ARCHITECT : The Architectural Team

14188

tat | the architectural team

Original Steel Windows

Replacement Windows

Archer | Donahue

Boston, MA

Archer Original Steel Windows On Ridgeway Lane

November 2, 2016

DEVELOPER : JDMD Owner, LLC

ARCHITECT : The Architectural Team

14188

tat | the architectural team

Archer | Donahue

Boston, MA

Donahue Construction
Circa 1965

November 2, 2016

DEVELOPER : JDMD Owner, LLC

ARCHITECT : The Architectural Team

14188

tat | the architectural team

Archer | Donahue

Boston, MA

Donahue Construction
Circa 1965

November 2, 2016

DEVELOPER : JDMD Owner, LLC

ARCHITECT : The Architectural Team

14188

tat | the architectural team

Archer | Donahue

Boston, MA

Archer Circa 1920
Steel Windows

November 2, 2016

DEVELOPER : JDMD Owner, LLC

ARCHITECT : The Architectural Team

14188

tat | the architectural team

Archer | Donahue

Boston, MA

Archer Circa 1920
Steel Windows

November 2, 2016

DEVELOPER : JDMD Owner, LLC

ARCHITECT : The Architectural Team

14188

tat | the architectural team

Archer | Donahue
Boston, MA

Archer Circa 1920
Steel Windows

November 2, 2016
DEVELOPER : JDMD Owner, LLC
ARCHITECT : The Architectural Team

14188

tat | the architectural team

Archer | Donahue

Boston, MA

Archer Circa 1920
Steel Windows

November 2, 2016

DEVELOPER : JDMD Owner, LLC

ARCHITECT : The Architectural Team

14188

tat | the architectural team

Archer | Donahue
Boston, MA

Archer Circa 1937
Steel Windows

November 2, 2016
DEVELOPER : JDMD Owner, LLC
ARCHITECT : The Architectural Team

14188

tat | the architectural team

Archer | Donahue
Boston, MA

Archer Circa 1937
Steel Windows

November 2, 2016
DEVELOPER : JDMD Owner, LLC
ARCHITECT : The Architectural Team

14188

tat | the architectural team

Archer | Donahue
Boston, MA

Archer Circa 1937
Steel Windows

November 2, 2016
DEVELOPER : JDMD Owner, LLC
ARCHITECT : The Architectural Team

14188

tat | the architectural team

Archer | Donahue

Boston, MA

Archer Circa 1937
Steel Windows

November 2, 2016

DEVELOPER : JDMD Owner, LLC

ARCHITECT : The Architectural Team

14188

tat | the architectural team

Archer | Donahue

Boston, MA

Archer Circa 1937
Steel Windows

November 2, 2016

DEVELOPER : JDMD Owner, LLC

ARCHITECT : The Architectural Team

14188

tat | the architectural team

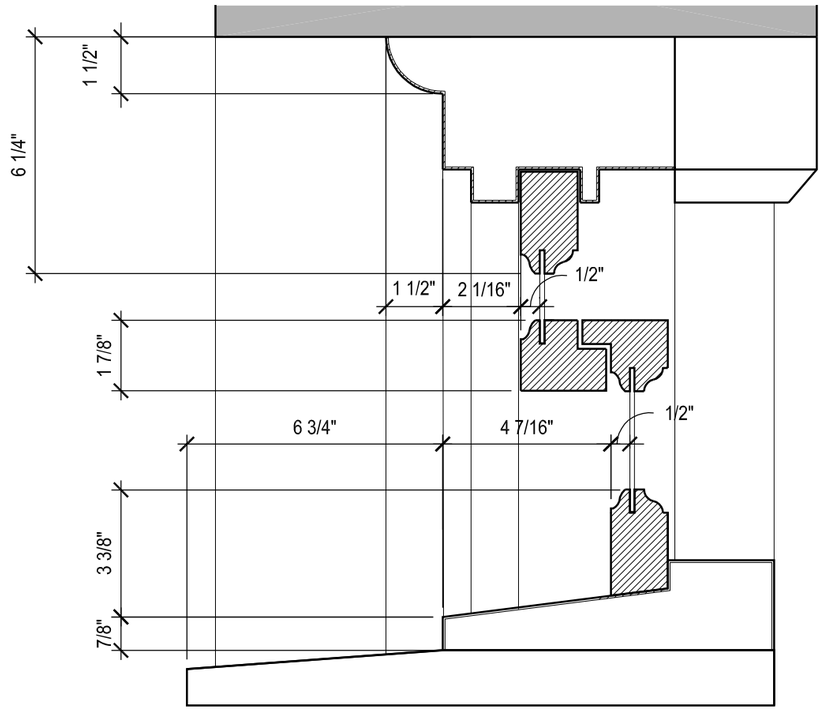

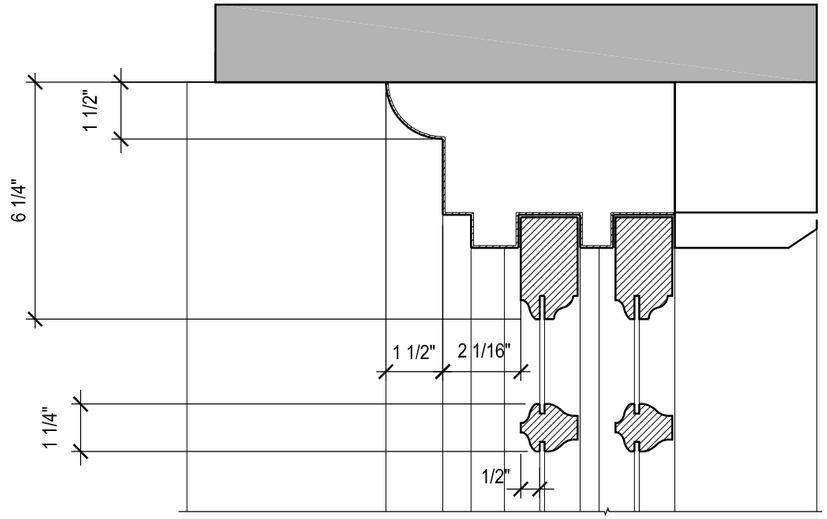

A1 TYPE A1 - WINDOW DETAILS - EXISTING

SCALE: 3" = 1'-0"

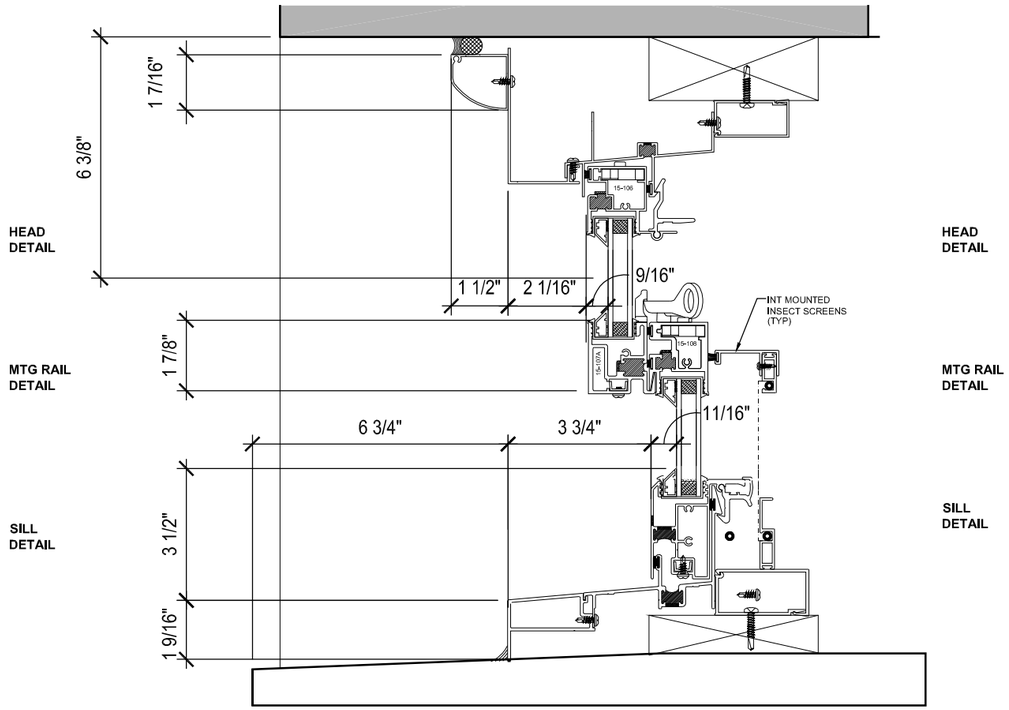

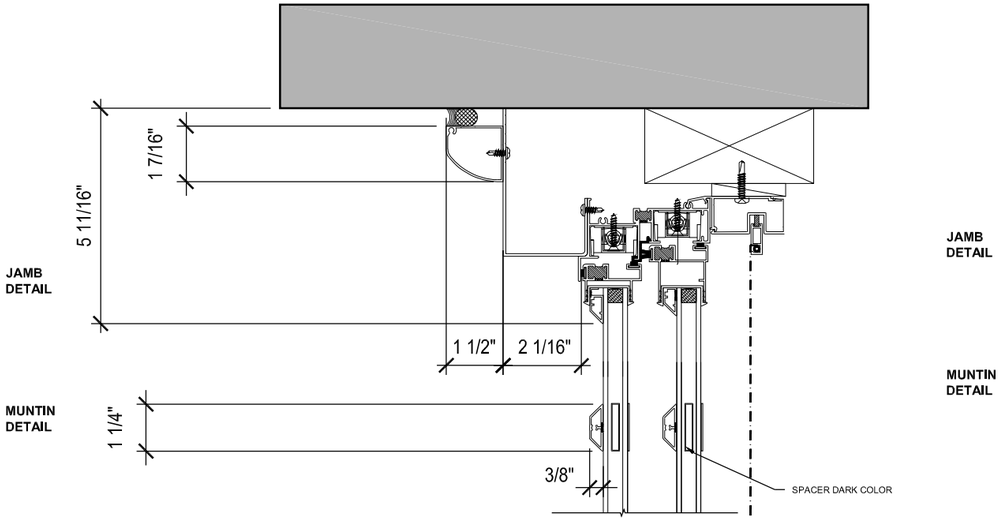

A1 TYPE A1 - WINDOW DETAILS- PROPOSED

SCALE: 3" = 1'-0"

Archer | Donahue
Boston, MA

Window Details

November 2, 2016

DEVELOPER : JDMD Owner, LLC

ARCHITECT : The Architectural Team

14188

tat | the architectural team

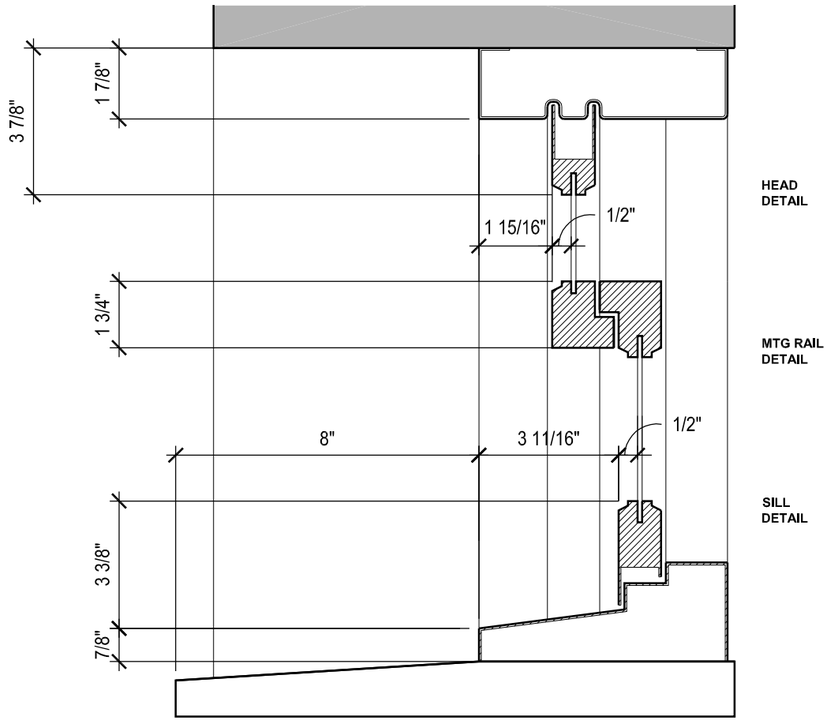

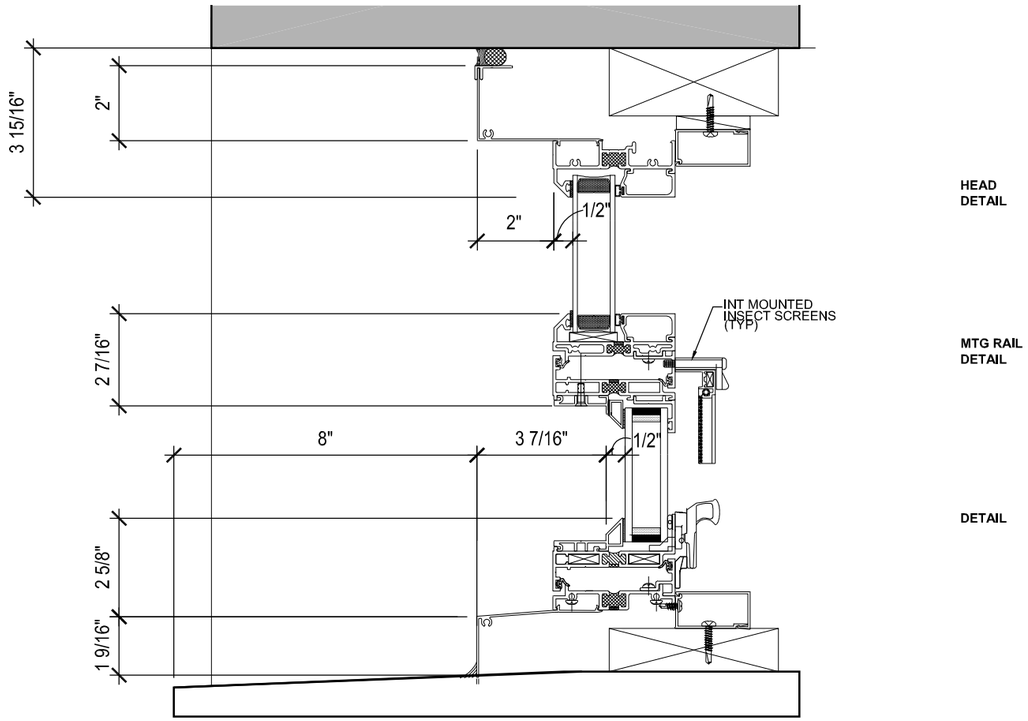

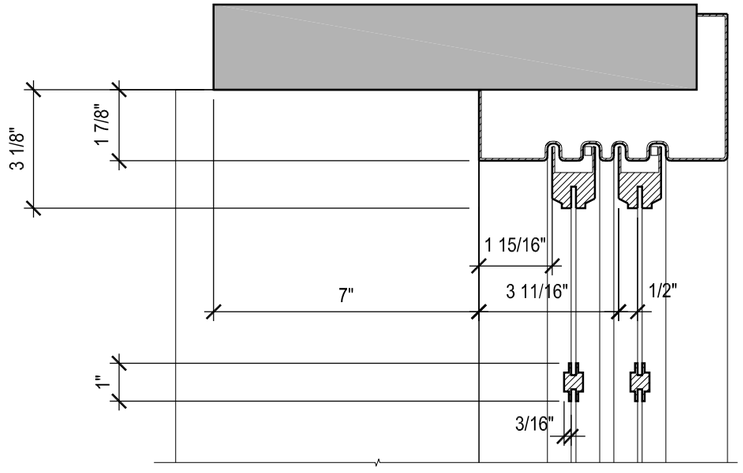

C1 TYPE C1 - WINDOW DETAIL - EXISTING

SCALE: 3" = 1'-0"

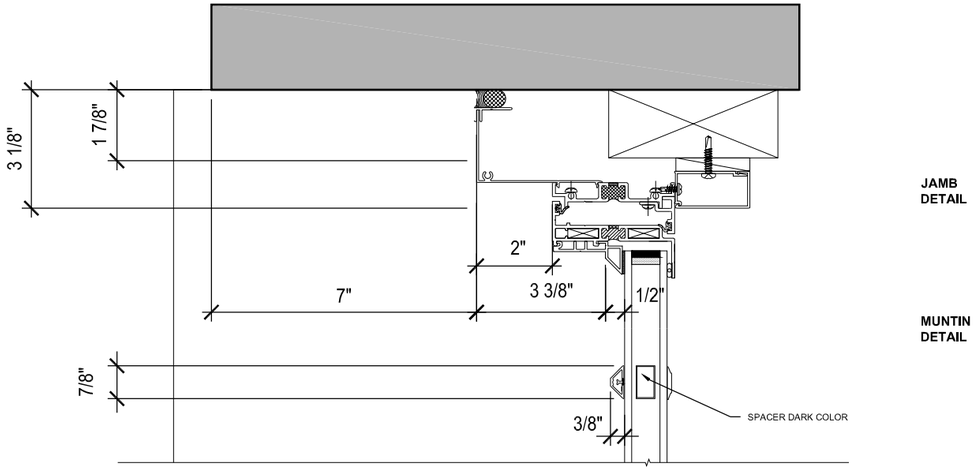

C1 TYPE C1 -WINDOW DETAIL - PROPOSED

SCALE: 3" = 1'-0"

Archer | Donahue
Boston, MA

Window Details

November 2, 2016

DEVELOPER : JDMD Owner, LLC

ARCHITECT : The Architectural Team

14188

tat | the architectural team

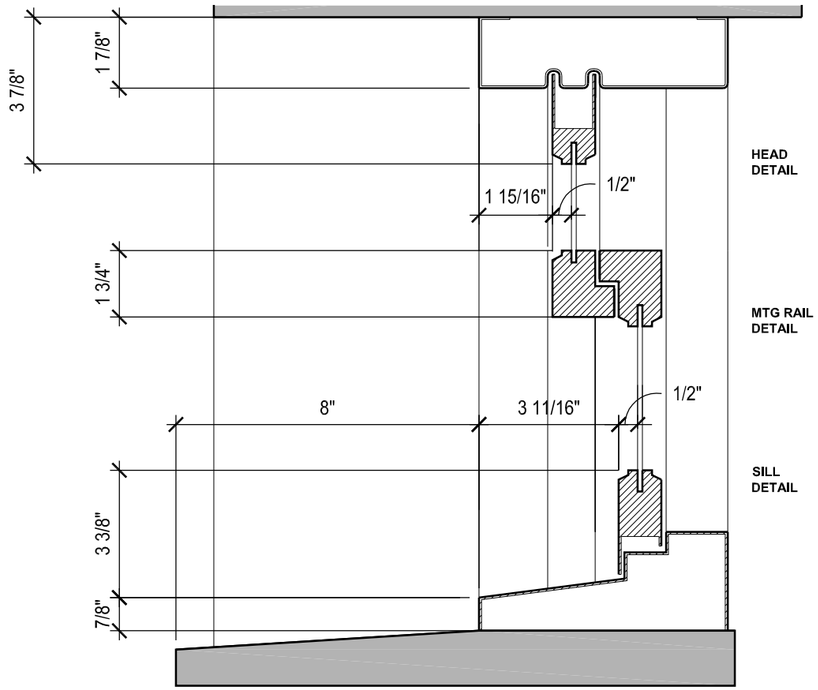

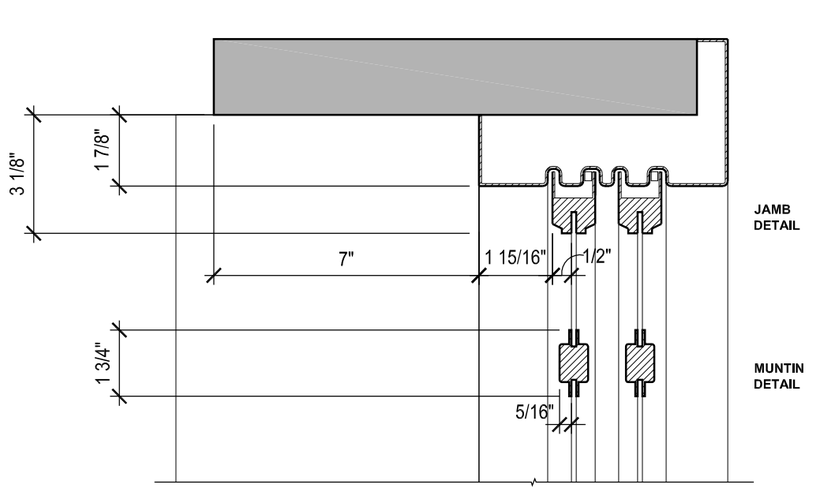

C4 TYPE C4 - WINDOW DETAIL - EXISTING

SCALE: 3" = 1'-0"

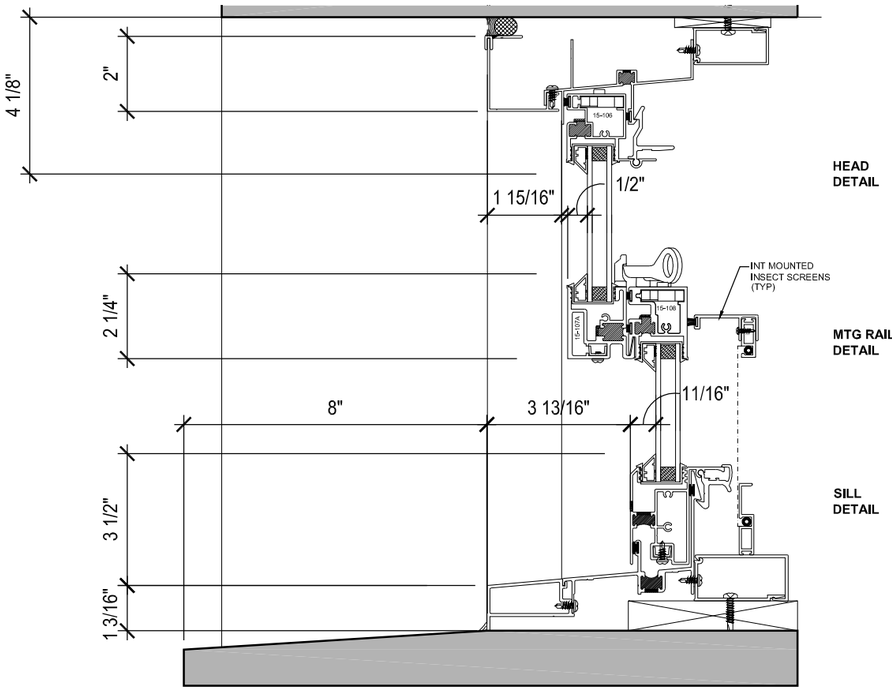

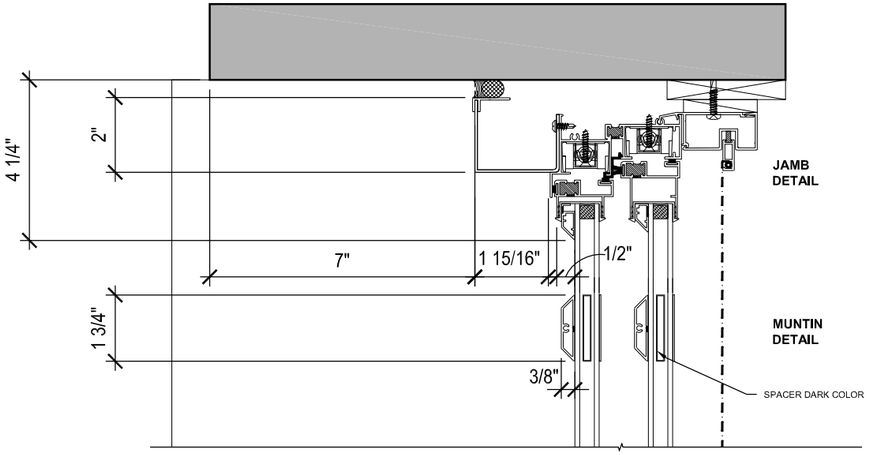

C4 TYPE C4 - WINDOW DETAIL - PROPOSED

SCALE: 3" = 1'-0"

Archer | Donahue
Boston, MA

Window Details

November 2, 2016

DEVELOPER : JDMD Owner, LLC

ARCHITECT : The Architectural Team

14188

tat | the architectural team

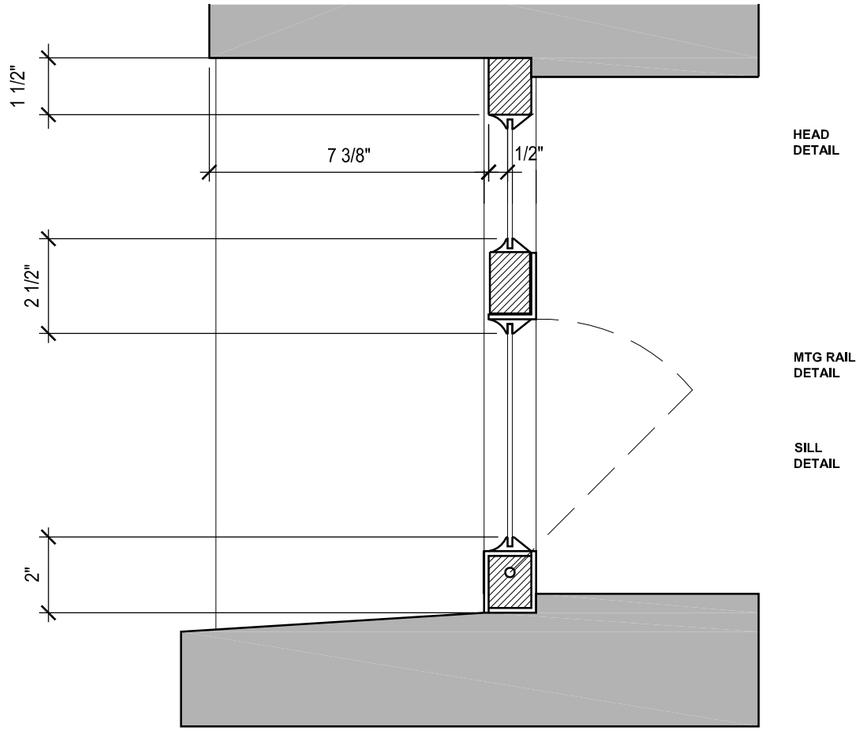

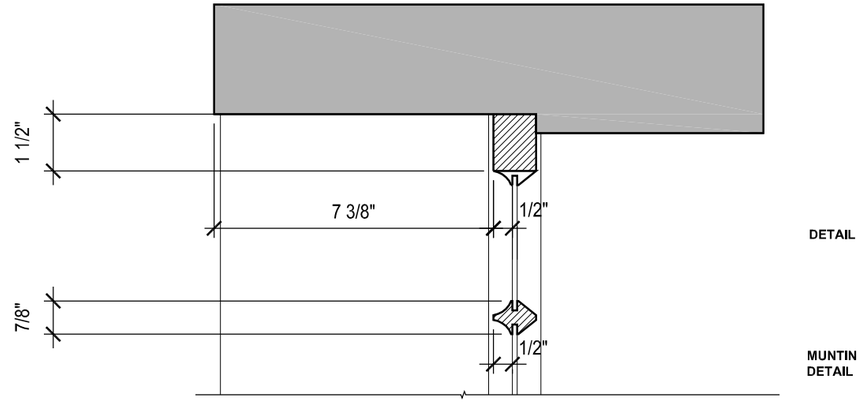

D1 TYPE D1- WINDOW DETAIL - EXISTING

SCALE: 3" = 1'-0"

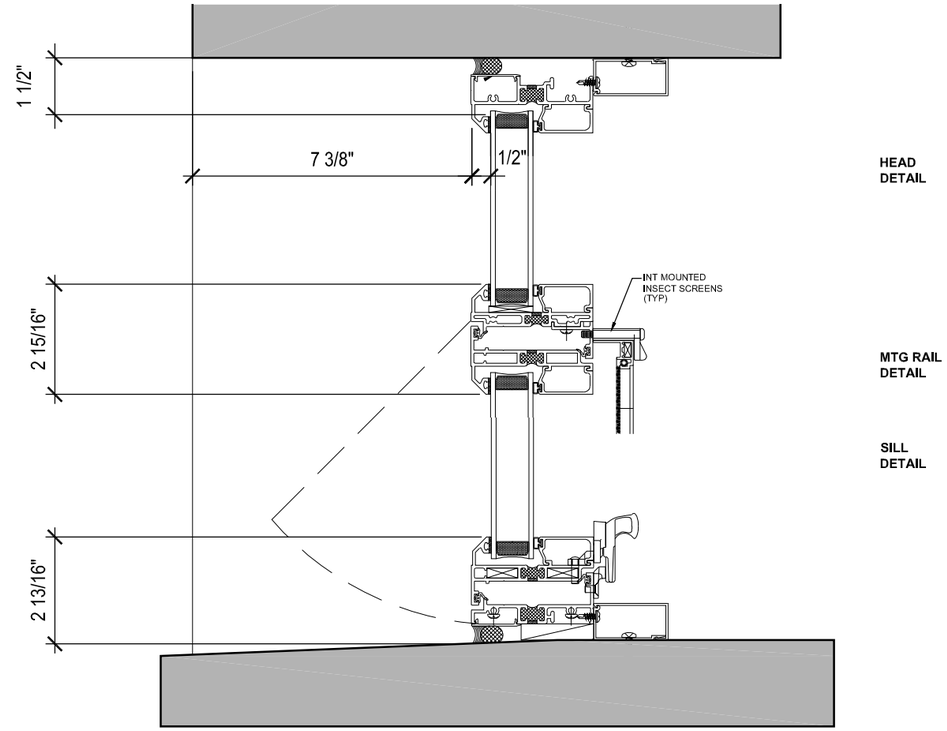

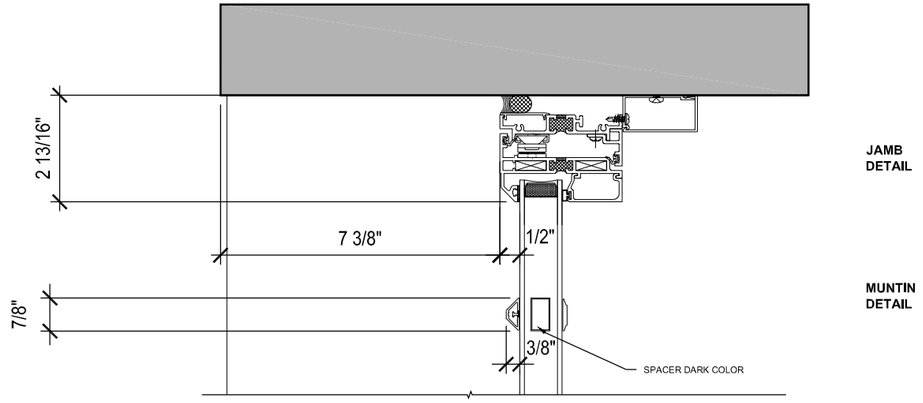

D1 TYPE D1- WINDOW DETAIL - PROPOSED

SCALE: 3" = 1'-0"

Archer | Donahue
Boston, MA

Window Details

November 2, 2016
DEVELOPER : JDMD Owner, LLC
ARCHITECT : The Architectural Team

14188

tat | the architectural team

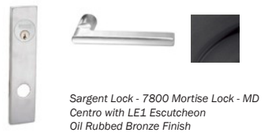

Sargent Lock - 7800 Mortise Lock - MD
Centro with LE1 Escutcheon
Oil Rubbed Bronze Finish

Door Hardware

1) 4.5" W by 15" H

Troy Lighting - Ethos LED Outdoor Wall Sconce

2) Square aperture recessed downlight over door in soffit

LOCATION A

Door Hardware:
Not applicable

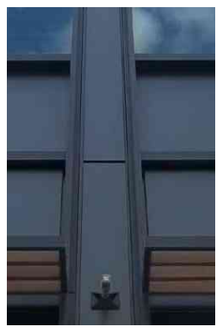

LOCATION B:
LED building mounted up lights

Door Hardware:
Not applicable doors are fixed closed

1) 4.5" W by 15" H
Troy Lighting - Ethos LED Outdoor Wall Sconce

LOCATION C

Door Hardware:
Not applicable door is fixed closed

3) 6" W by 4.9" H
Hubbardton Forge - Twilight Outdoor Semi-Flush - Small Ceiling Light

LOCATION D

Elmes World - Neoism Architectural Door Handles

Door Hardware

4) Custom Pendant Light 24" W by 60" H

2) Square aperture recessed downlights in wood plank ceiling

LOCATION E

Baldwin - Lakeshore Entrance Trim

Door Hardware

2) Square aperture recessed downlights in wood plank ceiling

LOCATION F

Door Hardware:
Not applicable

5) 9" W by 9" H
Modern Forms - Pandora 9 Inch LED Outdoor Wall Light

LOCATION G:
LED building mounted down lights

Sargent Lock - 7800 Mortise Lock - MD
Centro with LE1 Escutcheon
Oil Rubbed Bronze Finish

Door Hardware

2) Square aperture recessed downlight over door in soffit

LOCATION H

Archer | Donahue
Boston, MA

Exterior Door Hardware and Lighting

November 2, 2016

DEVELOPER : JDMD Owner, LLC

ARCHITECT : The Architectural Team

14188

tat | the architectural team

Ridgeway Lane Elevation

Derne Street Elevation

Sargent Lock - 7800 Mortise Lock - MD
Centro with LE1 Escutcheon
Oil Rubbed Bronze Finish

Door Hardware

5) 9" W by 9" H
Modern Forms - Pandora 9
Inch LED Outdoor Wall Light

LOCATION I

Baldwin - Lakeshore Entrance
Trim

Door Hardware

6) 18" high custom pendant light
Boyd Lighting -
Belvedere Lantern

LOCATION J

Teka Illumination - Surface Mounted
Observatory

LOCATION K:
security cameras mounted at building corners

Archer | Donahue
Boston, MA

Exterior Door Hardware
and Lighting

November 2, 2016
DEVELOPER : JDMD Owner, LLC
ARCHITECT : The Architectural Team

14188

tat | the architectural team

Masonry repairs to Archer building façade

- Repair or replace in kind damaged existing precast concrete cornice blocks, lintels, sills, and decorative façade panels
- Repair or replace deteriorated masonry opening steel lintels (retain precast non-bearing precast lintels above steel)
- Where existing masonry joints are eroded or brittle, joints are to be repointed with new mortar to match color and texture of the existing (color to come from aggregate). Joints are to be struck to match the existing. Smeared or flush joints are not permitted.
- Remove all plant growth on masonry units and joints
- Clean precast and brick masonry units where indicated to prevent deterioration using the following methods:
  -Use hot water 140 degrees to 180 degrees F. Water to be clean, potable, free of oils, acids, alkalis, salts, and organic matter.
  -Brushes are to be fiber bristles only (no wire).
  -Job Mixed Detergent Solution: Prepared by mixing 2 cups of tetrasodium polyphosphate, ½ cup of laundry detergent, and 20 quarts of hot water for every 5 gal. of solution required.
  -Job Mixed Mold, Mildew, and Algae Remover: Solution prepared by mixing 2 cups of tetrasodium polyphosphate, 5 quarts of 5% sodium hypochlorite (bleach), 15 quarts of hot water for every 5 gal. of solution required.

Masonry Mortar Joints

- Mortar mixture strength to be less than 1 part cement to 2 parts lime to 7 to 9 parts sand.
- Mortar color to come from aggregate.
- At Archer building joints are to be struck to match the existing. Donahue joints are to be struck to a slightly concave joint. Smeared or flush joints are not permitted.

Archer | Donahue

Boston, MA

Shadow Study
March 21 @ 9:00AM

October 27, 2016

DEVELOPER : Center Court Partners

ARCHITECT : The Architectural Team

14188

tat | the architectural team

Archer | Donahue

Boston, MA

Shadow Study
March 21 @ 12:00PM

October 27, 2016

DEVELOPER : Center Court Partners

ARCHITECT : The Architectural Team

14188

tat | the architectural team

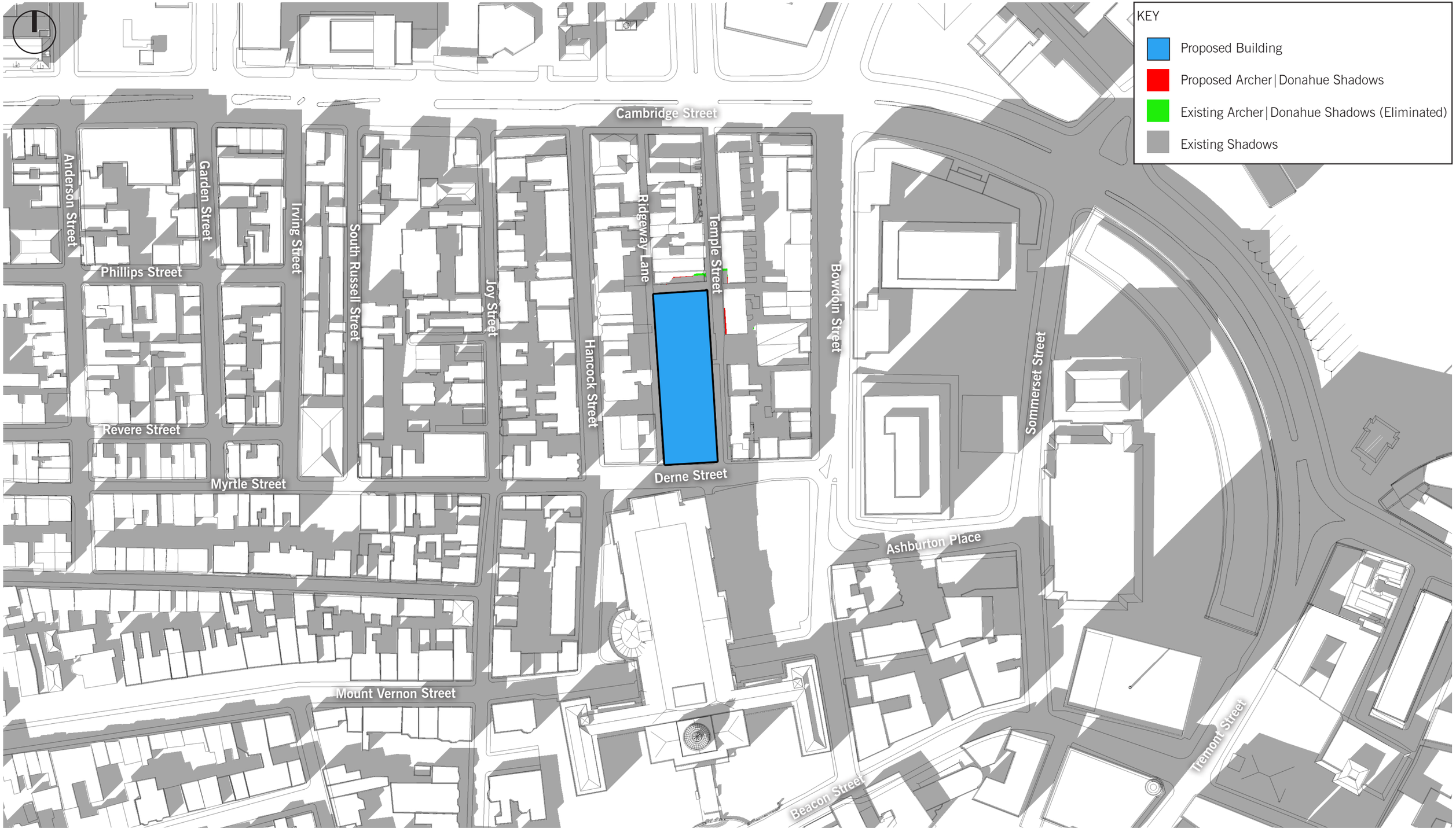

Archer | Donahue

Boston, MA

Shadow Study
March 21 @ 3:00PM

October 27, 2016

DEVELOPER : Center Court Partners

ARCHITECT : The Architectural Team

14188

tat | the architectural team

Archer | Donahue

Boston, MA

Shadow Study
March 21 @ 6:00PM

October 27, 2016

DEVELOPER : Center Court Partners

ARCHITECT : The Architectural Team

14188

tat | the architectural team

Archer | Donahue

Boston, MA

Shadow Study
June 21 @ 9:00AM

October 27, 2016

DEVELOPER : Center Court Partners

ARCHITECT : The Architectural Team

14188

tat | the architectural team

Archer | Donahue

Boston, MA

Shadow Study
June 21 @ 12:00PM

October 27, 2016

DEVELOPER : Center Court Partners

ARCHITECT : The Architectural Team

14188

tat | the architectural team

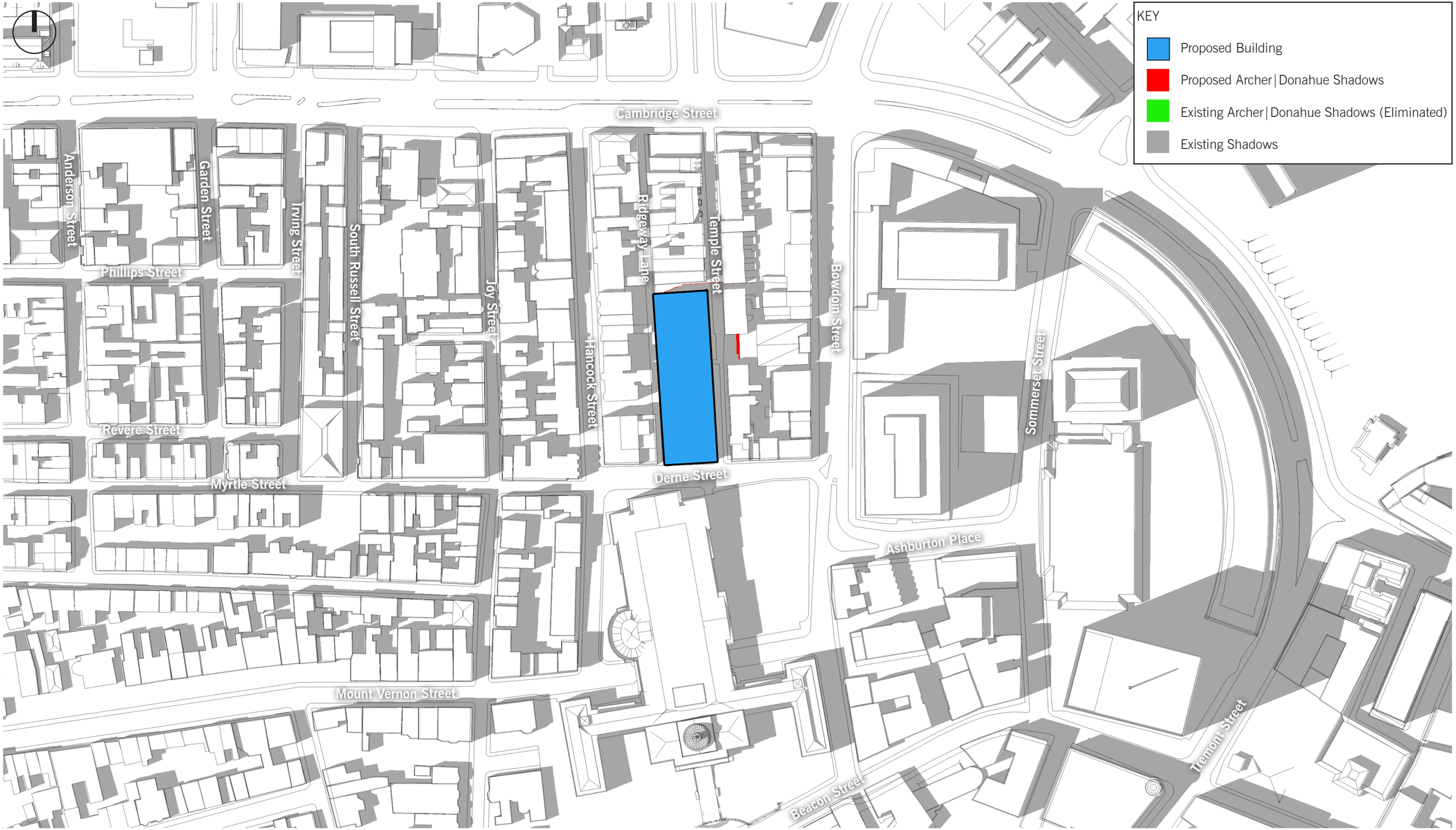

Archer | Donahue

Boston, MA

Shadow Study
June 21 @ 3:00PM

October 27, 2016

DEVELOPER : Center Court Partners

ARCHITECT : The Architectural Team

14188

tat | the architectural team

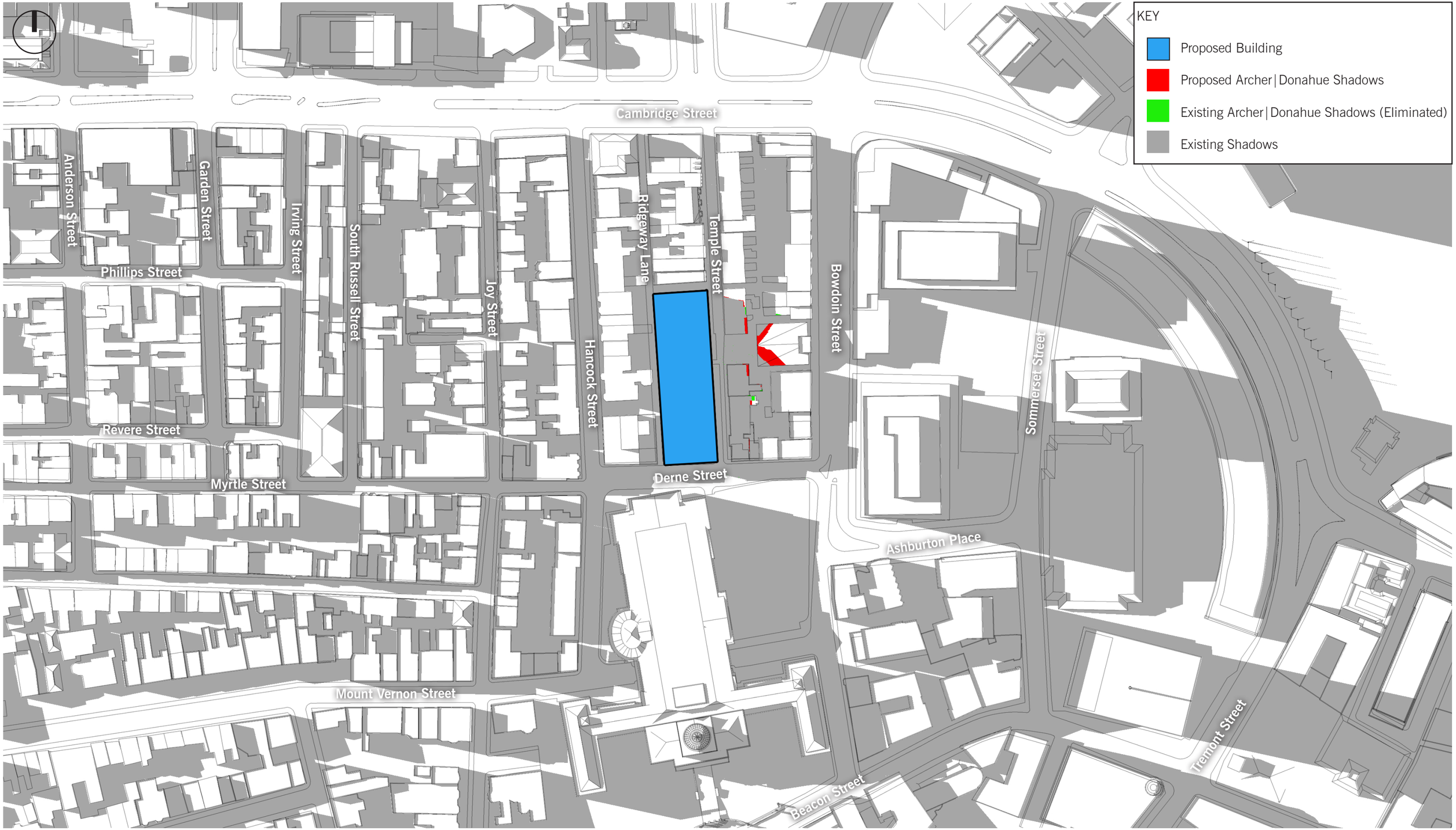

Archer | Donahue

Boston, MA

Shadow Study
June 21 @ 6:00PM

October 27, 2016

DEVELOPER : Center Court Partners

ARCHITECT : The Architectural Team

14188

tat | the architectural team

Archer | Donahue

Boston, MA

Shadow Study
September 21 @ 9:00AM

October 27, 2016

DEVELOPER : Center Court Partners

ARCHITECT : The Architectural Team

14188

tat | the architectural team

Archer | Donahue

Boston, MA

Shadow Study
September 21 @ 12:00PM

October 27, 2016

DEVELOPER : Center Court Partners

ARCHITECT : The Architectural Team

14188

tat | the architectural team

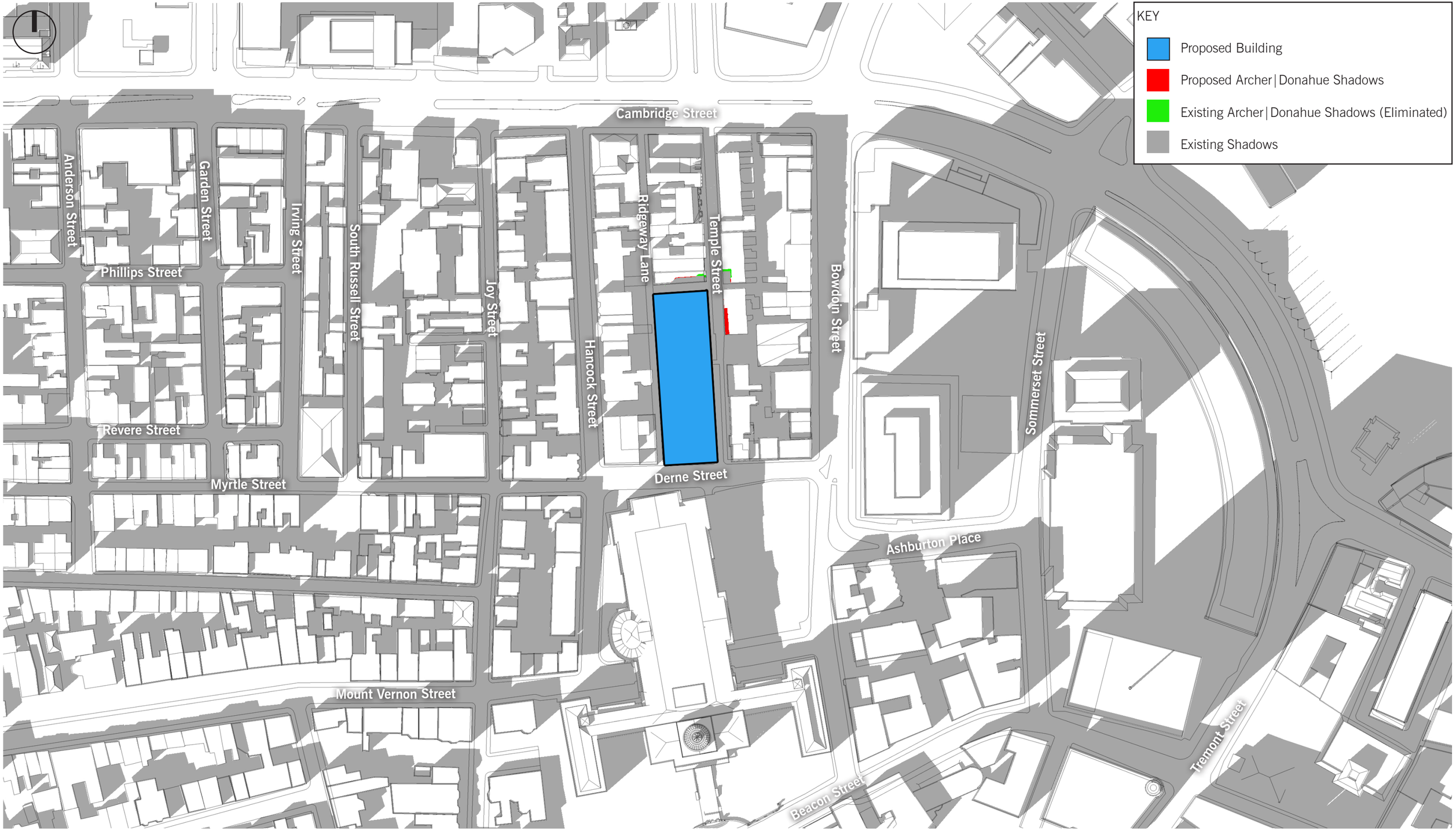

Archer | Donahue

Boston, MA

Shadow Study
September 21 @ 3:00PM

October 27, 2016

DEVELOPER : Center Court Partners

ARCHITECT : The Architectural Team

14188

tat | the architectural team

Archer | Donahue

Boston, MA

Shadow Study
September 21 @ 6:00PM

October 27, 2016

DEVELOPER : Center Court Partners

ARCHITECT : The Architectural Team

14188

tat | the architectural team

Archer | Donahue

Boston, MA

Shadow Study
December 21 @ 9:00AM

October 27, 2016

DEVELOPER : Center Court Partners

ARCHITECT : The Architectural Team

14188

tat | the architectural team

Archer | Donahue

Boston, MA

Shadow Study
December 21 @ 12:00PM

October 27, 2016

DEVELOPER : Center Court Partners

ARCHITECT : The Architectural Team

14188

tat | the architectural team

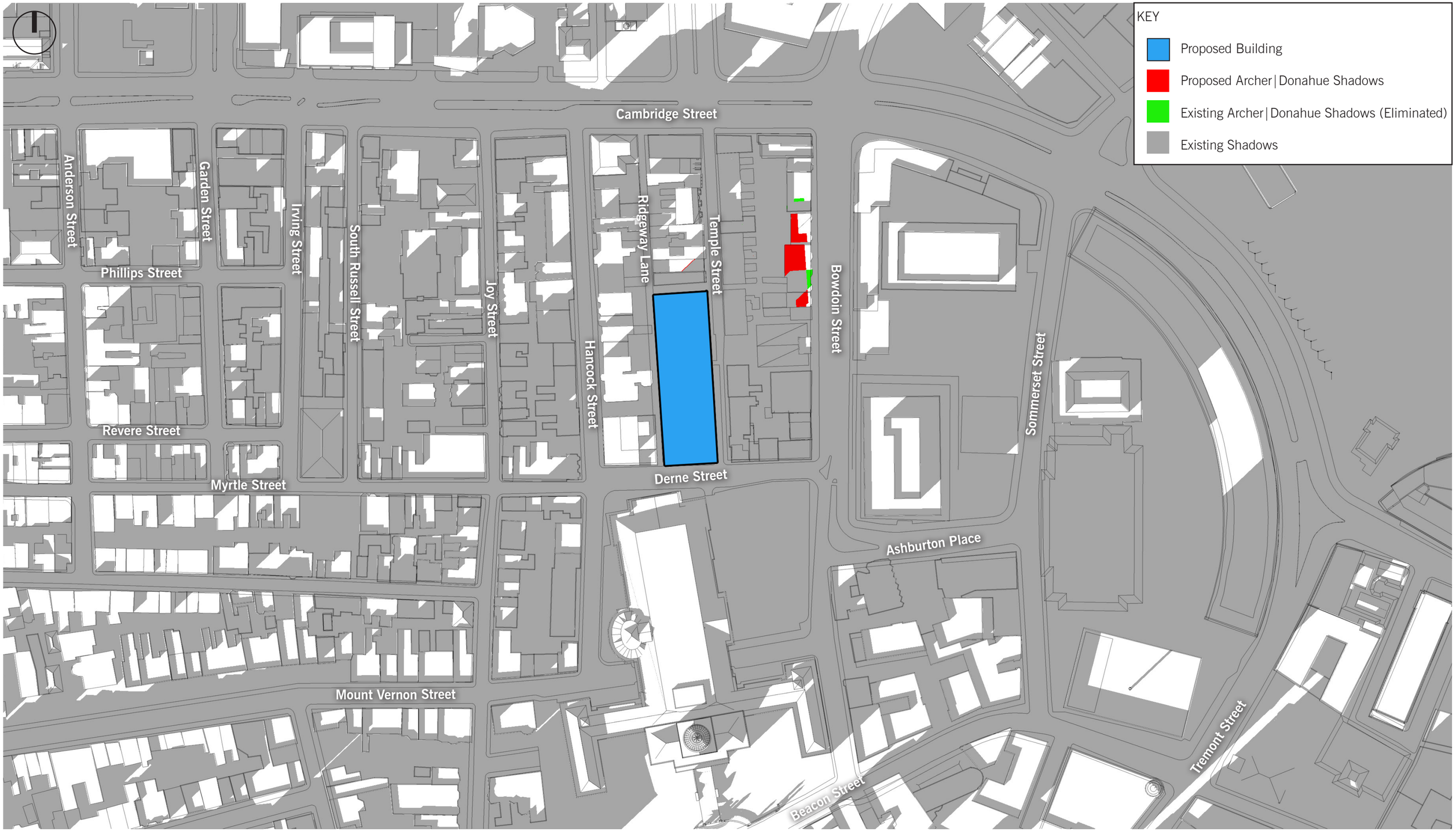

Archer | Donahue

Boston, MA

Shadow Study
December 21 @ 3:00PM

October 27, 2016

DEVELOPER : Center Court Partners

ARCHITECT : The Architectural Team

14188

tat | the architectural team

Archer | Donahue

Boston, MA

Shadow Study
December 21 @ 6:00PM

October 27, 2016

DEVELOPER : Center Court Partners

ARCHITECT : The Architectural Team

14188

tat | the architectural team